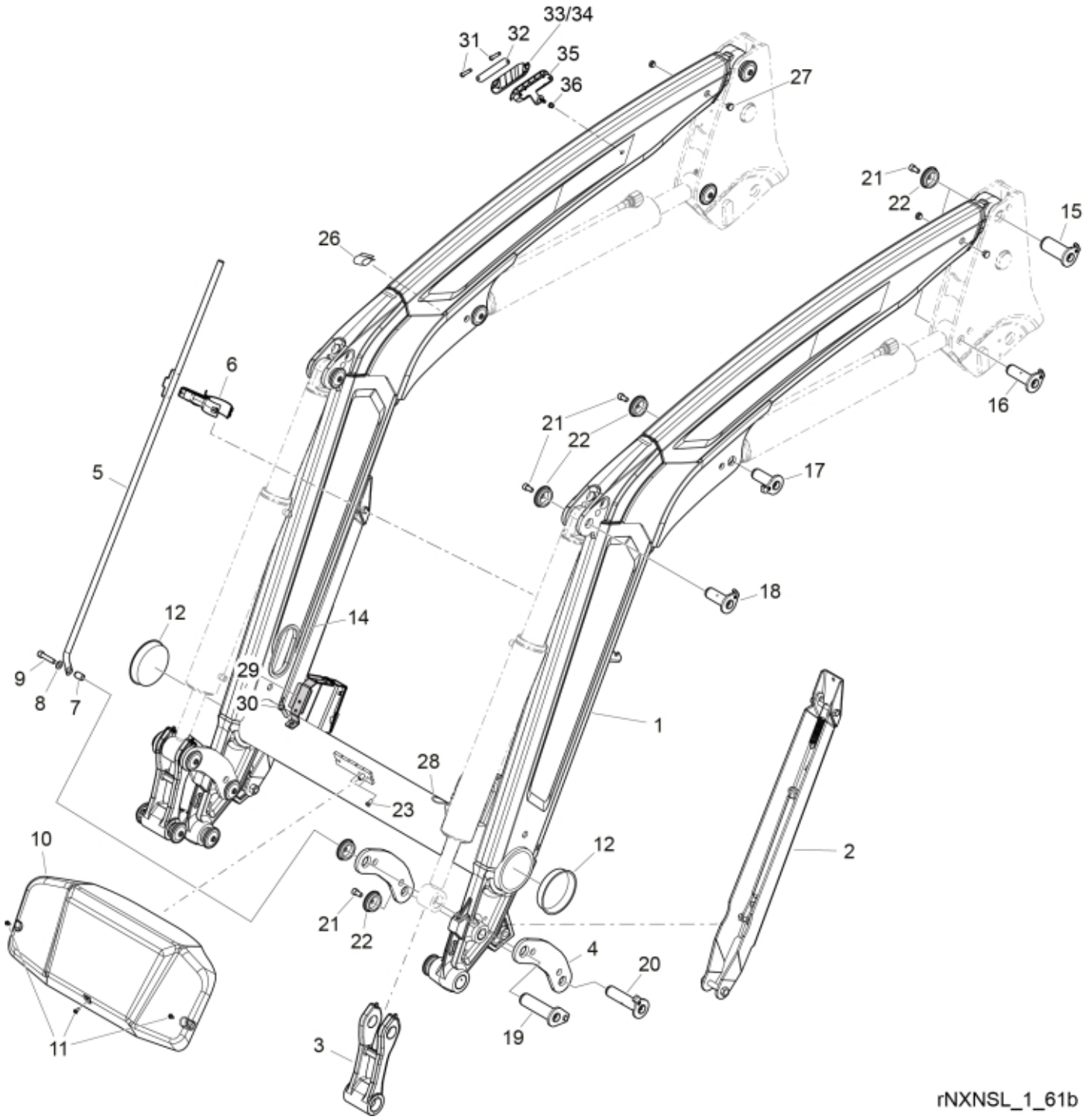
33/34
31
32
35
36
27
21
22
15
26
6
16
21
22
5
17
18
12
14
9
8
7
29
30
1
28
23
10
12
2
21
22
4
20
19
3
11
rNXNSL_1_61b

© 2025 Jost

Part assemblies Loader beam

PartNo	Pos	Qty	Name	Specifications
60107825-17	1	1	Loader beam w. bushings	Black Texture
4501225-17	2	2	Support leg	Black Texture
60018638	3	2	Link w. bushings	Glossy Black
60052806	3*	2	Link w. bushings	Glossy Black *for loaders with Euro/SMS
60062381-17	4	4	Link	Black Texture
5215216	5	1	Indicator rod	
5215208	6	1	Holder kit	
5215227	7	1	Spacer	
5013110	8	1	Washer	BRB 10.5x22x2
5050605	9	1	Screw	MC6S 10x50 Loc
60115321	10	1	Centre Cover	
5051982	11	3	Screw	M6x8
5053448	12	2	Cover	
60009870	14	2	Edge cover	16 mm
60107537	15	2 PCS	Pivot Pin	D=45, L=96
60018058	16	2	Pivot Pin	D=35, L=96mm
60018059	17	2	Pivot Pin	D=35, L84mm
60107536	18	2	Pivot Pin	D=35, L=80
60003248	19	2	Pivot Pin	D=40, L=127
60018053	20	2	Pivot Pin	D=35, L=127mm
5050608	21	15	Screw	MC6S M10x20 Loc
5215131	22	16	Locking cover	
5002058	23	2	Screw	M6S 8x16
60011125	26	2	Cover	
60021154	27	8	Plug	
60008713	28	2	Edge cover	
60070968	29	2	Hose guide	
5002077	30	2	Screw	M6S 10x30
5053656	31	2	Screw	M8x60
60117642	32	1	Clamp plate	
60117558	33	1	Hose clamp	Upper part
60117559	34	1	Hose clamp L3	Upper part
60129942	35	1	Hose clamp	Lower part
5011921	36	1	Nut	M6MF M8

© 2025 Jost