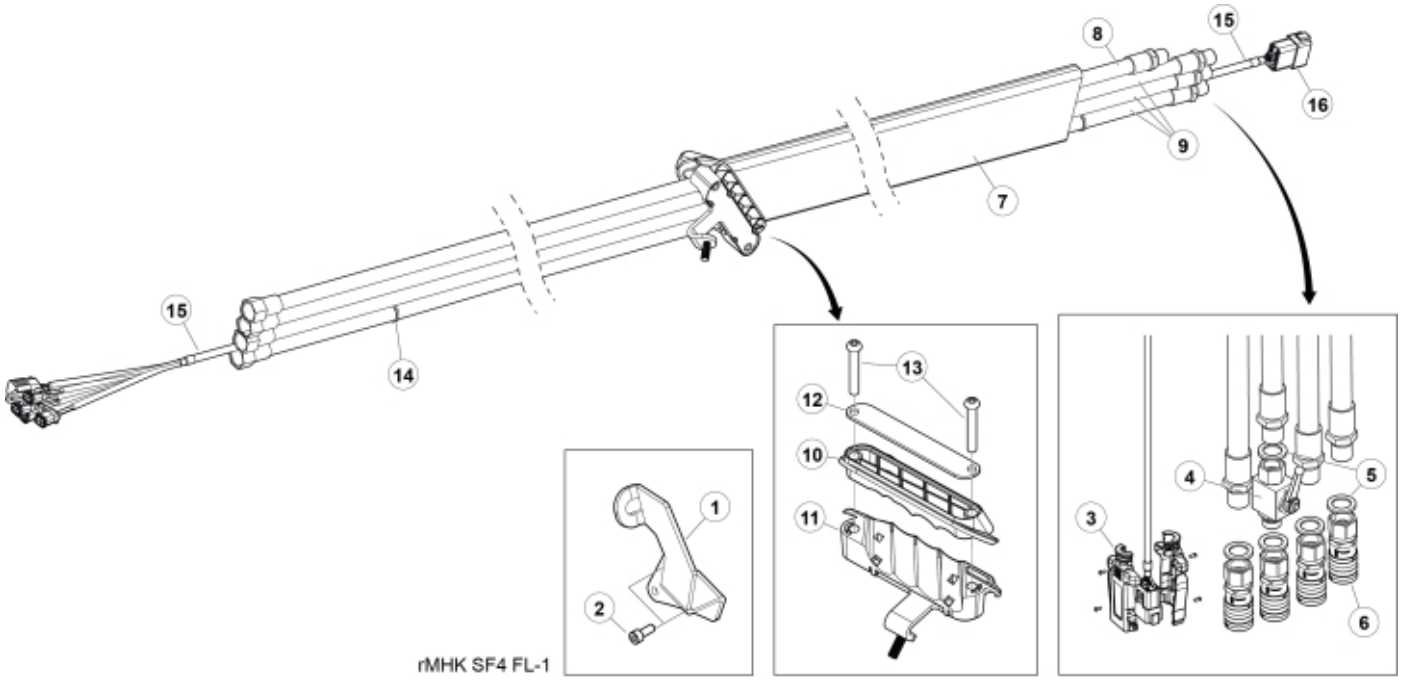

rMHK SF4 FL-1

© 2025 Jost

Part assemblies Main hose kit, SF4

PartNo	Pos	Qty	Name	Specifications
60049421	1	1	Holder kit	
5004061	2	2	• Screw	MC6S M8x20
59021021	3	1	Connector handle	
5033898	4	1	Shut-off valve	1/2"
5013853	5	5	Dowty washer	Tredo 1/2", Part is included in kit 60007907 Hose cpl., 9032177 Hose cpl.
5044976	6	4	Coupling	3/8" (5044946)
5033894	7	1	Protection sleeve	800mm, D=60-70mm
60126060	8	1	Hose	1/2" L=4080 1/2GRU - 1/2GRLM
60126054	9	3	Hose	1/2" L=4155 1/2GRU - 1/2GRLM
60117558	10	1	Hose clamp	Upper part
60129942	11	1	Hose clamp	Lower part
60117642	12	1	Clamp plate	
5053656	13	2	Screw	M8x60
5033621	14	8	Cable tie	4.6x150
59050108	15	1 PCS	Electr. Cable	L=4615
5050918	16	1	• Connector	Deutsch DT 12 pin female

© 2025 Jost