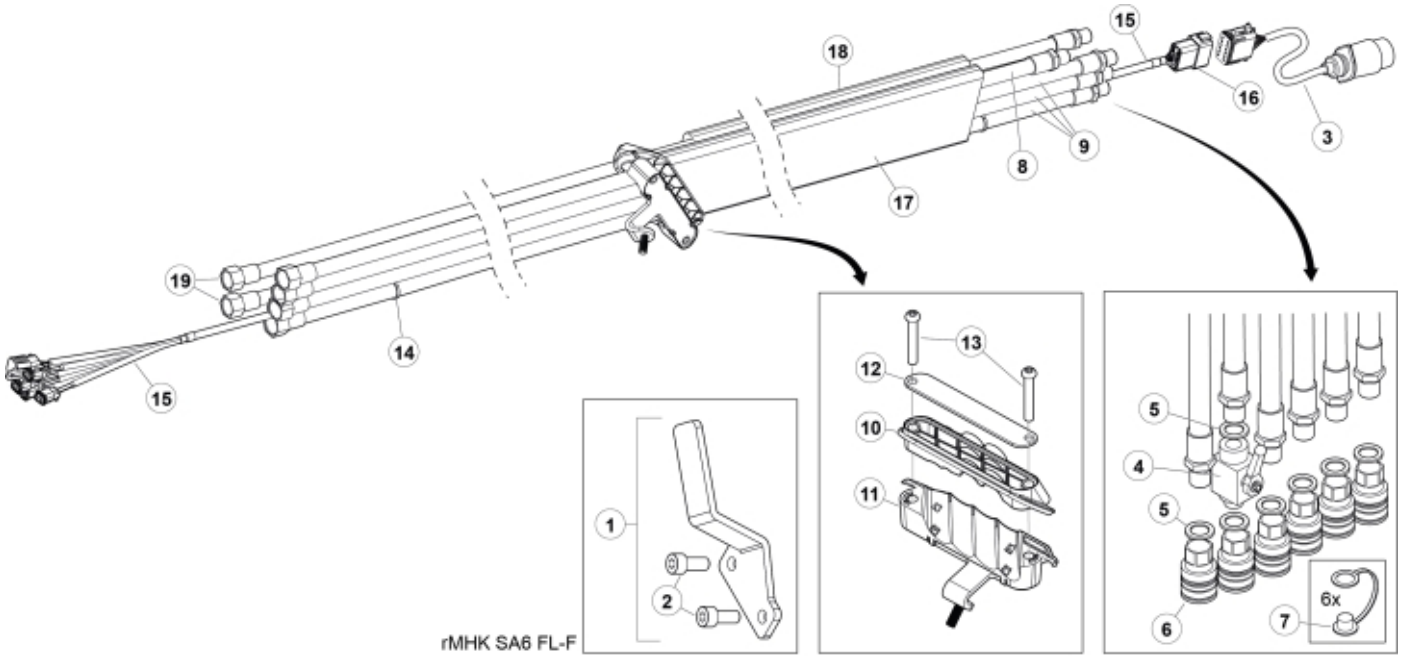

rMHK SA6 FL-F

© 2025 Jost

Description	with 7-pin trailer connector
Part assemblies	Main hose kit, SA6

PartNo	Pos	Qty	Name	Specifications
60015929	1	1	Holder cpl.	
5004061	2	2	• Screw	MC6S M8x20
59050117	3	1	Electr. Cable	QCS to Caravan
5033898	4	1	Shut-off valve	1/2"
5013853	5	7	Dowty washer	Tredo 1/2", Part is included in kit 60007907 Hose cpl., 9032177 Hose cpl.
5044127	6	6	Quick Coupling	1/2", Part is included in kit 60007907 Hose cpl., 9032177 Hose cpl.
5044130	7	6	Dust Cover	Part is included in kit 60007907 Hose cpl., 9032177 Hose cpl.
60125550	8	1	Hose	1/2" L=3090 1/2GRU - 1/GRLM
60125539	9	3	Hose	1/2" L= 3165 1/2GRU - 1/2GRLM
60117559	10	1	Hose clamp L3	Upper part
60129942	11	1	Hose clamp	Lower part
60117642	12	1	Clamp plate	
5053656	13	2	Screw	M8x60
5033621	14	6	Cable tie	4.6x150
59050110	15	1	Electr. Cable	L=3875
5050918	16	1	• Connector	Deutsch DT 12 pin female
5033894	17	1	Protection sleeve	800mm, D=60-70mm
5034121	18	1	Protection sleeve	
60125551	19	2	Hose	3/8" L=3245 1/2GRU - 3/8GRLM
5033606	20	1	Cable tie	7,5 x 385

© 2025 Jost