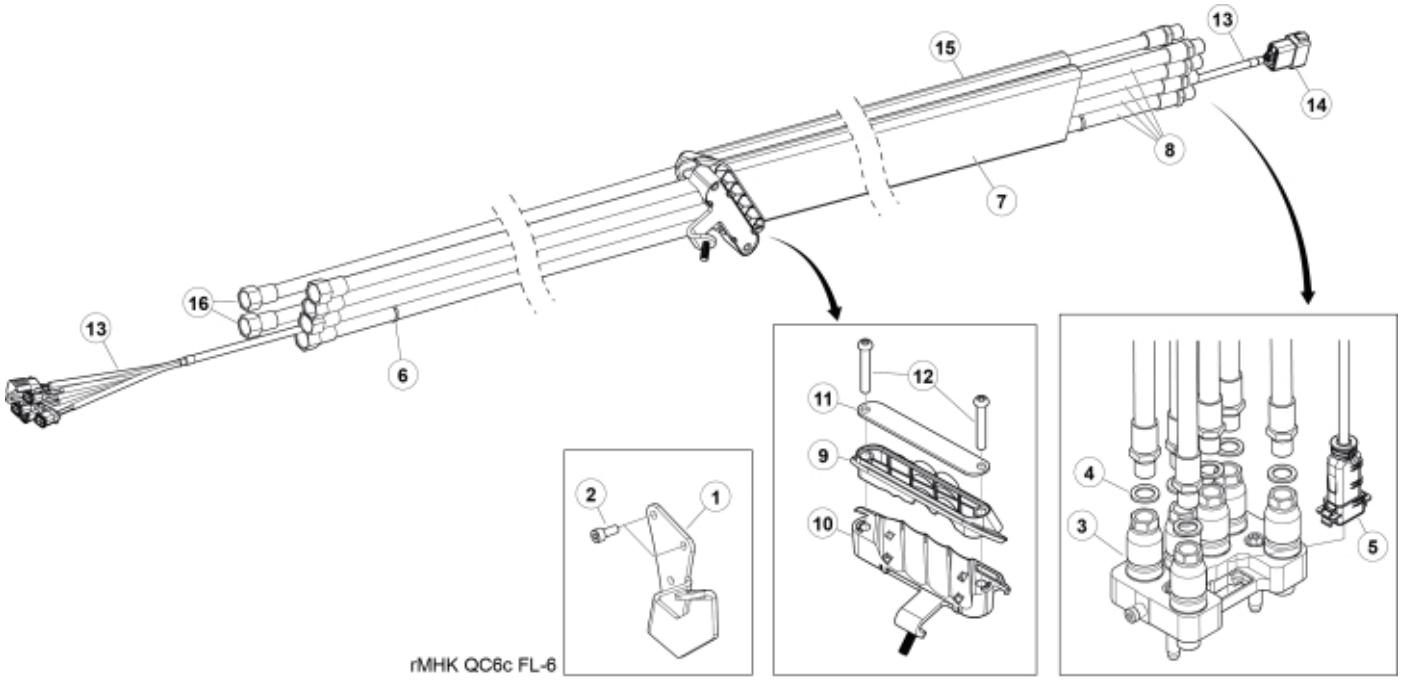

rMHK QC6c FL-6

© 2025 Jost

Part assemblies Main hose kit, QC6c

PartNo	Pos	Qty	Name	Specifications
60049421	1	1	Holder kit	
5004061	2	2	• Screw	MC6S M8x20
59020690	3	1 PCS	QC6c Mobile	1/2"
5013853	4	6	Dowty washer	Tredo 1/2", Part is included in kit 60007907 Hose cpl., 9032177 Hose cpl.
59021020	5	1	Connector handle	
5033621	6	6	Cable tie	4.6x150
5033894	7	1	Protection sleeve	800mm, D=60-70mm
60125539	8	4	Hose	1/2" L= 3165 1/2GRU - 1/2GRLM
60117559	9	1	Hose clamp L3	Upper part
60129942	10	1	Hose clamp	Lower part
60117642	11	1	Clamp plate	
5053656	12	2	Screw	M8x60
59050110	13	1	Electr. Cable	L=3875
5050918	14	1	• Connector	Deutsch DT 12 pin female
5034121	15	1	Protection sleeve	
60125551	16	2	Hose	3/8" L=3245 1/2GRU - 3/8GRLM

© 2025 Jost