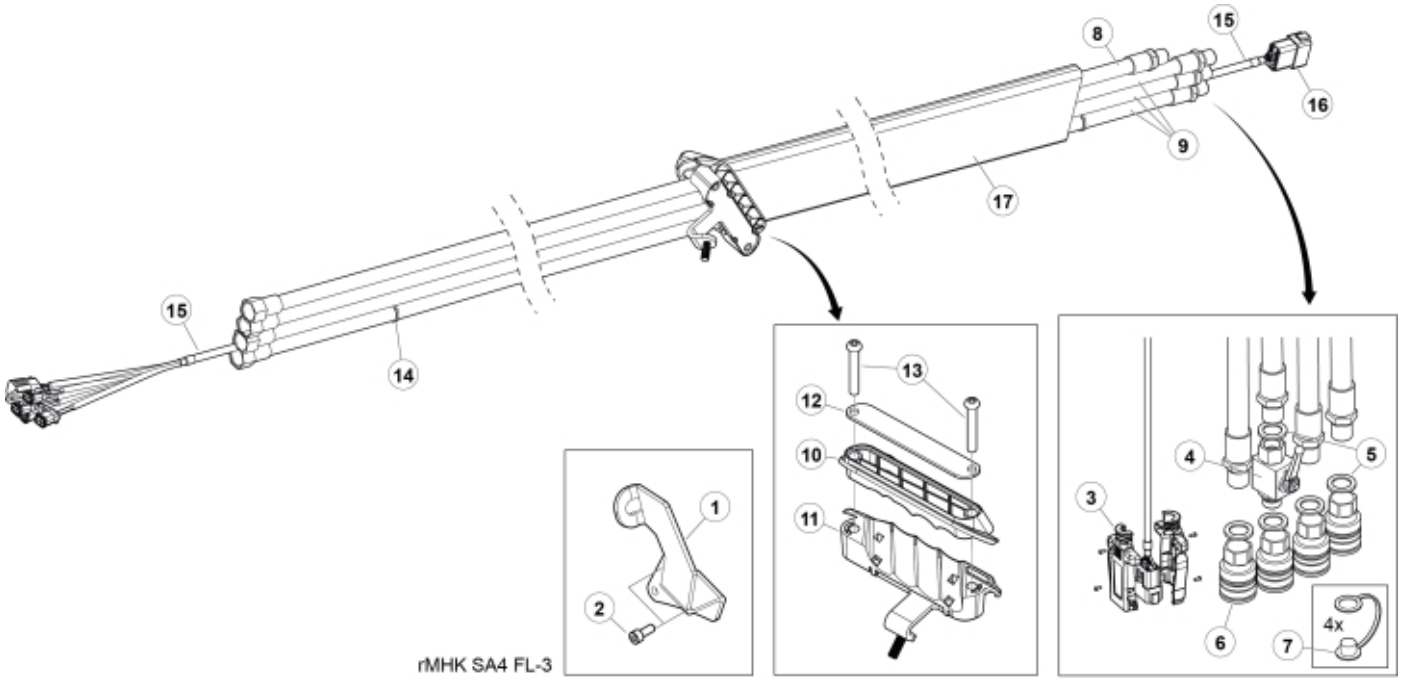


rMHK SA4 FL-3


© 2025 Jost

**Part assemblies** Main hose kit, SA4

| PartNo | Pos | Qty | Name | Specifications |
|---|---|---|---|---|
| 60049421 | 1 | 1 | Holder kit | |
| 5004061 | 2 | 2 | • Screw | MC6S M8x20 |
| 59021021 | 3 | 1 | Connector handle | |
| 5033898 | 4 | 1 | Shut-off valve | 1/2" |
| 5013853 | 5 | 5 | Dowty washer | Tredo 1/2", Part is included in kit 60007907 Hose cpl., 9032177 Hose cpl. |
| 5044127 | 6 | 4 | Quick Coupling | 1/2", Part is included in kit 60007907 Hose cpl., 9032177 Hose cpl. |
| 5044130 | 7 | 4 | Dust Cover | Part is included in kit 60007907 Hose cpl., 9032177 Hose cpl. |
| 60126006 | 8 | 1 | Hose | 1/2" L=3660 1/2GRU - 1/2GRLM |
| 60126004 | 9 | 3 | Hose | 1/2" L=3735 1/2GRU - 1/2GRLM |
| 60117558 | 10 | 1 | Hose clamp | Upper part |
| 60129942 | 11 | 1 | Hose clamp | Lower part |
| 60117642 | 12 | 1 | Clamp plate | |
| 5053656 | 13 | 2 | Screw | M8x60 |
| 5033621 | 14 | 7 | Cable tie | 4.6x150 |
| 59050109 | 15 | 1 | Electr. Cable | L=4190 |
| 5050918 | 16 | 1 | • Connector | Deutsch DT 12 pin female |
| 5033894 | 17 | 1 | Protection sleeve | 800mm, D=60-70mm |


© 2025 Jost