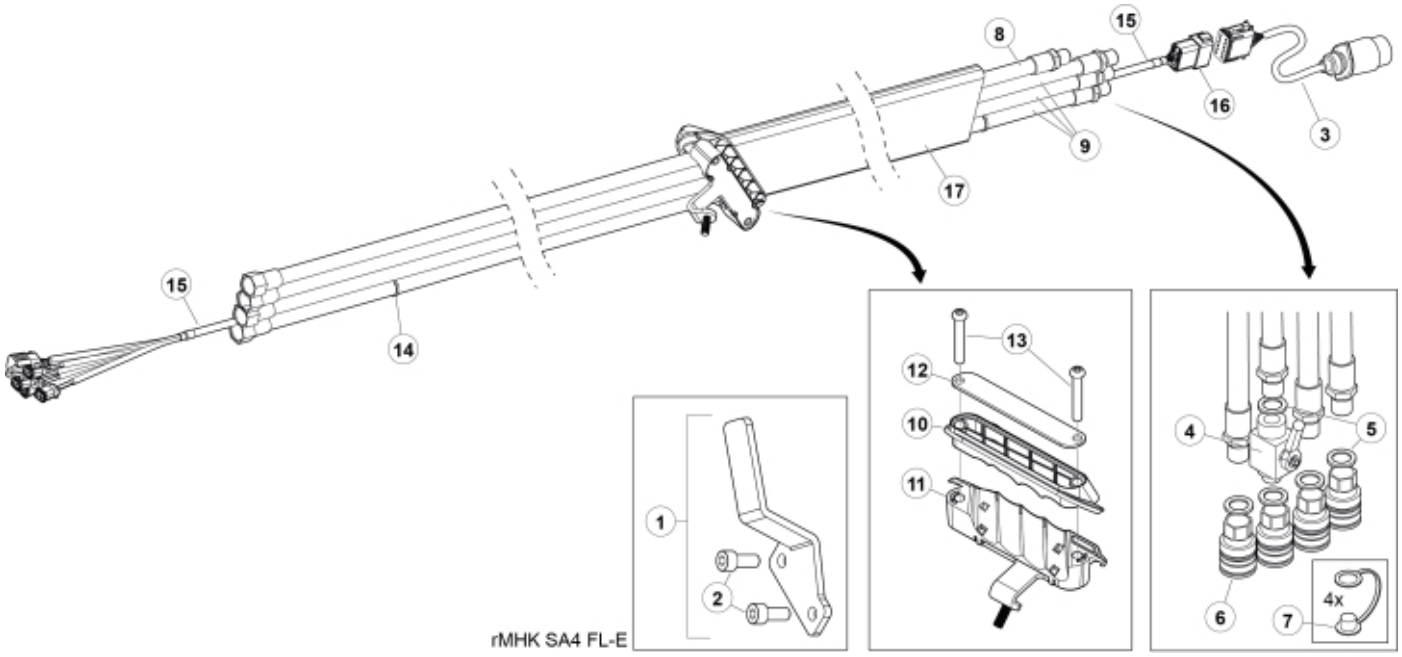

rMHK SA4 FL-E

© 2025 Jost

Description	with 7-pin trailer connector
Part assemblies	Main hose kit, SA4

PartNo	Pos	Qty	Name	Specifications
60015929	1	1	Holder cpl.	
5004061	2	2	• Screw	MC6S M8x20
59050117	3	1	Electr. Cable	QCS to Caravan
5033898	4	1	Shut-off valve	1/2"
5013853	5	5	Dowty washer	Tredo 1/2", Part is included in kit 60007907 Hose cpl., 9032177 Hose cpl.
5044127	6	4	Quick Coupling	1/2", Part is included in kit 60007907 Hose cpl., 9032177 Hose cpl.
5044130	7	4	Dust Cover	Part is included in kit 60007907 Hose cpl., 9032177 Hose cpl.
60126006	8	1	Hose	1/2" L=3660 1/2GRU - 1/2GRLM
60126004	9	3	Hose	1/2" L=3735 1/2GRU - 1/2GRLM
60117558	10	1	Hose clamp	Upper part
60129942	11	1	Hose clamp	Lower part
60117642	12	1	Clamp plate	
5053656	13	2	Screw	M8x60
5033621	14	7	Cable tie	4.6x150
59050109	15	1	Electr. Cable	L=4190
5050918	16	1	• Connector	Deutsch DT 12 pin female
5033894	17	1	Protection sleeve	800mm, D=60-70mm

© 2025 Jost