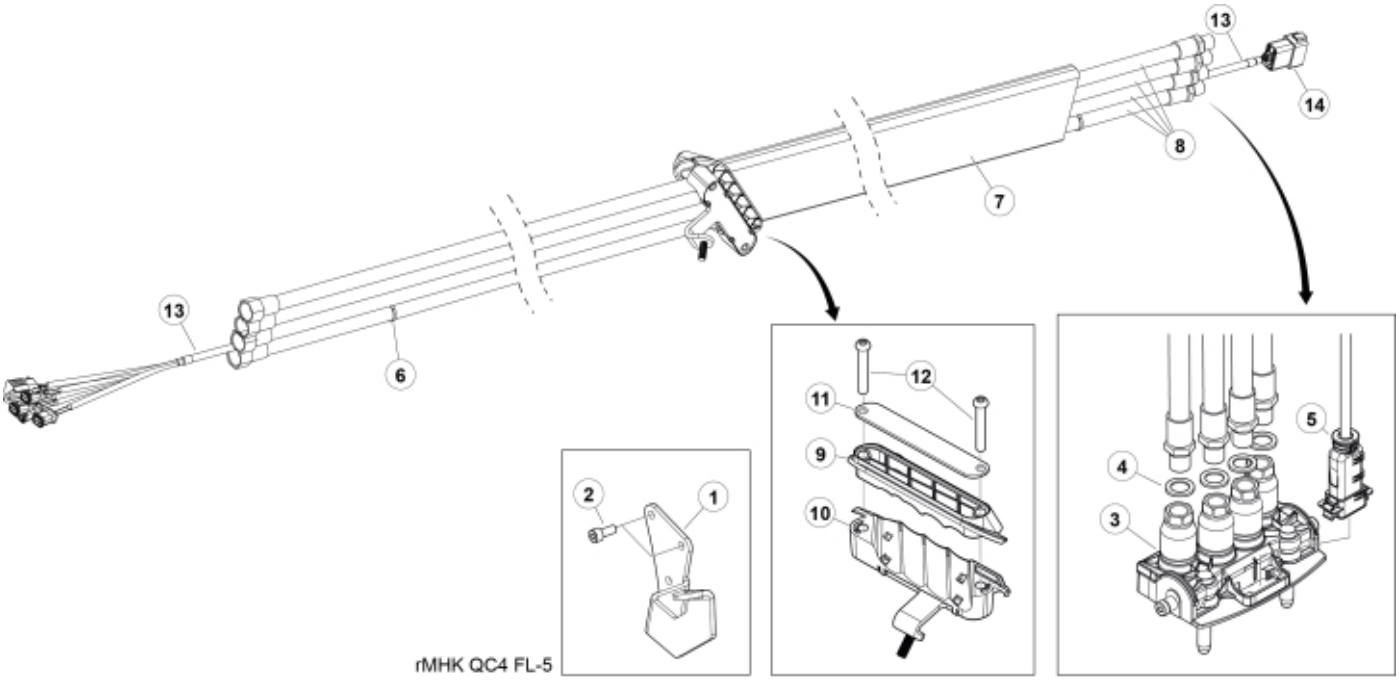


rMHK QC4 FL-5


© 2025 Jost

**Part assemblies** Main hose kit, QC4

| PartNo | Pos | Qty | Name | Specifications |
|---|---|---|---|---|
| 60049421 | 1 | 1 | Holder kit | |
| 5004061 | 2 | 2 | • Screw | MC6S M8x20 |
| 59020490 | 3 | 1 | QC4 Mobile | |
| 5013853 | 4 | 4 | Dowty washer | Tredo 1/2", Part is included in kit 60007907 Hose cpl., 9032177 Hose cpl. |
| 59021020 | 5 | 1 | Connector handle | |
| 5033621 | 6 | 7 | Cable tie | 4.6x150 |
| 5033894 | 7 | 1 | Protection sleeve | 800mm, D=60-70mm |
| 60126011 | 8 | 4 | Hose | 1/2" L=3810 1/2GRU - 1/2GRLM |
| 60117558 | 9 | 1 | Hose clamp | Upper part |
| 60129942 | 10 | 1 | Hose clamp | Lower part |
| 60117642 | 11 | 1 | Clamp plate | |
| 5053656 | 12 | 2 | Screw | M8x60 |
| 59050109 | 13 | 1 | Electr. Cable | L=4190 |
| 5050918 | 14 | 1 | • Connector | Deutsch DT 12 pin female |


© 2025 Jost