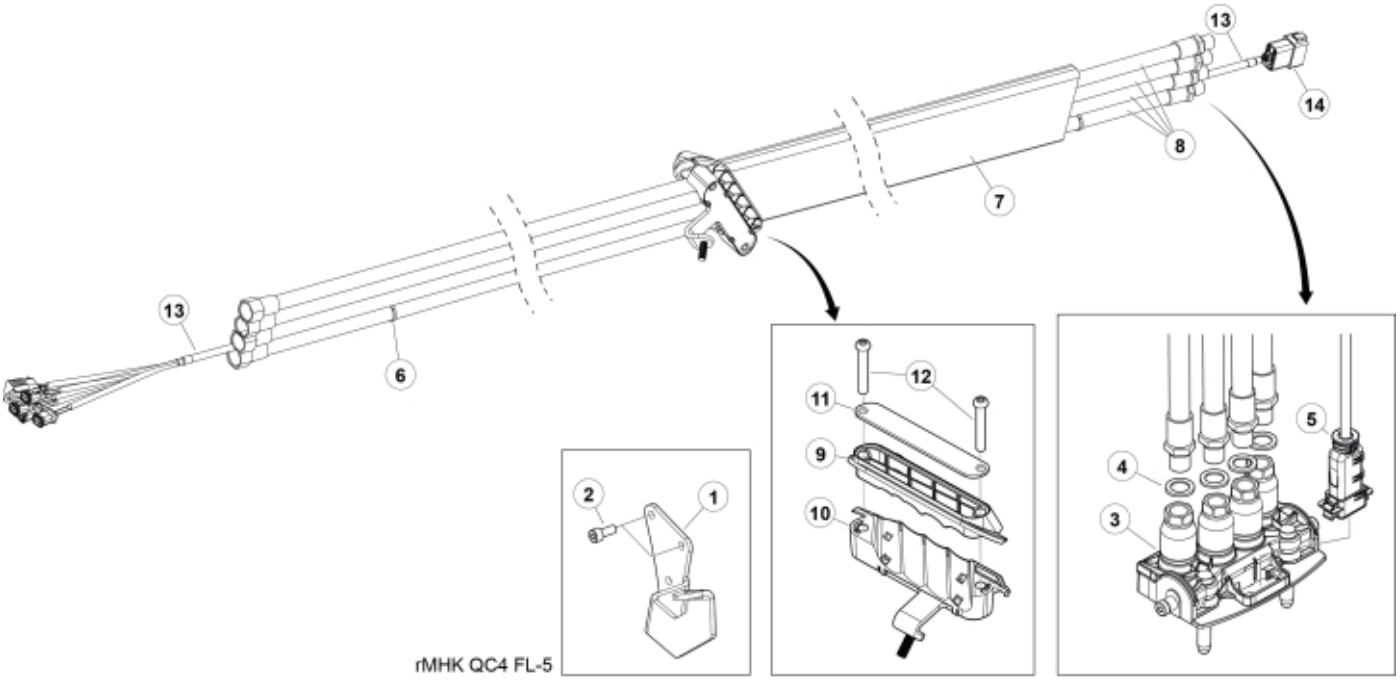

rMHK QC4 FL-5

© 2025 Jost

Part assemblies Main hose kit, QC4

PartNo	Pos	Qty	Name	Specifications
60049421	1	1	Holder kit	
5004061	2	2	• Screw	MC6S M8x20
59020490	3	1	QC4 Mobile	
5013853	4	4	Dowty washer	Tredo 1/2", Part is included in kit 60007907 Hose cpl., 9032177 Hose cpl.
59021020	5	1	Connector handle	
5033621	6	8	Cable tie	4.6x150
5033894	7	1	Protection sleeve	800mm, D=60-70mm
60126054	8	4	Hose	1/2" L=4155 1/2GRU - 1/2GRLM
60117558	9	1	Hose clamp	Upper part
60129942	10	1	Hose clamp	Lower part
60117642	11	1	Clamp plate	
5053656	12	2	Screw	M8x60
59050108	13	1 PCS	Electr. Cable	L=4615
5050918	14	1	• Connector	Deutsch DT 12 pin female

© 2025 Jost