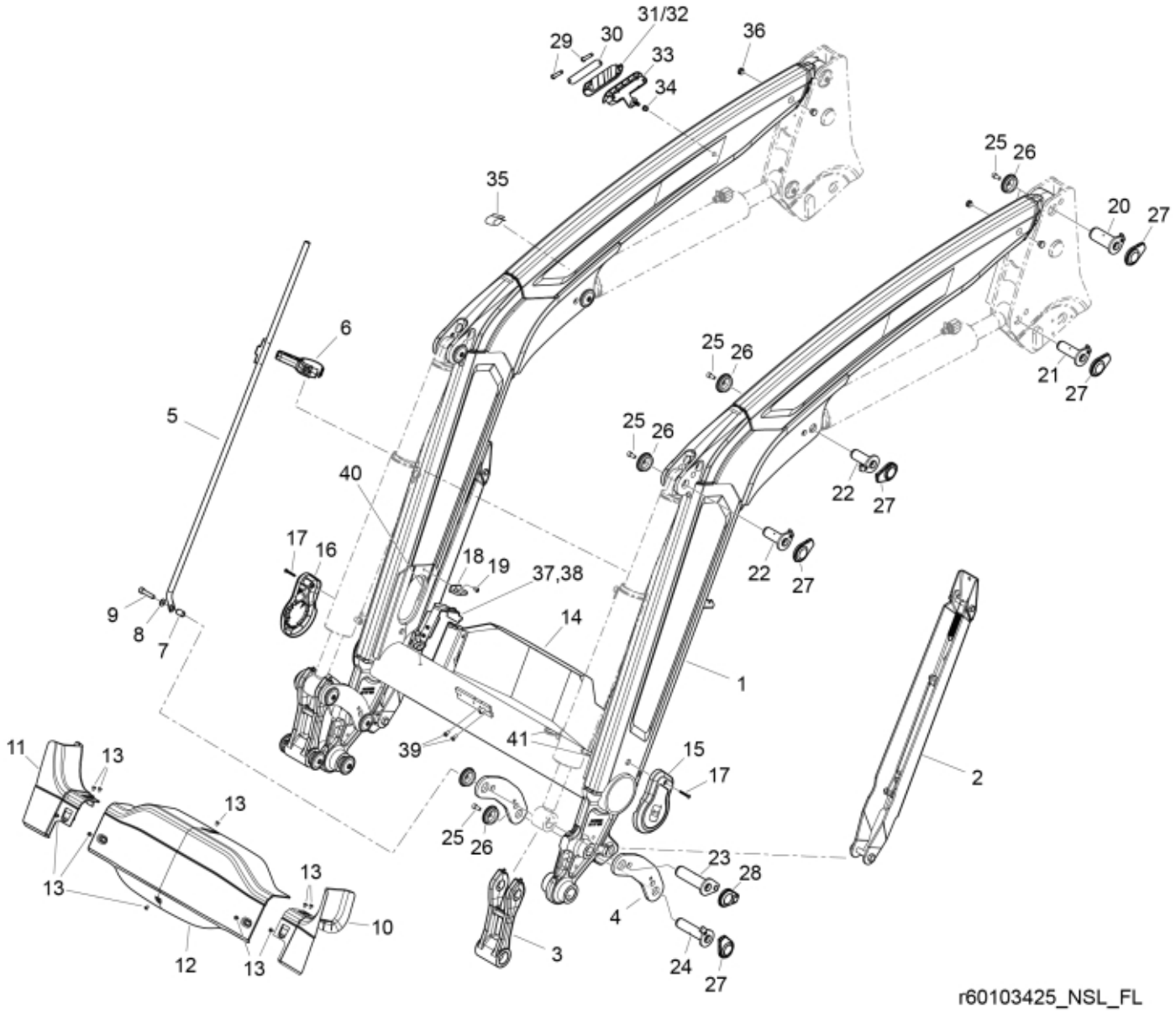
31/32
29
30
33
34
36
35
25
26
20
27
6
5
21
22
40
17
16
18
19
37,38
14
9
8
7
1
39
41
15
2
11
13
23
28
4
10
12
3
24
r60103425_NSL_FL


© 2025 Jost

| | | |
|---|---|---|
| **Part assemblies** | Loader beam | |
| **Specification** | Specification: Black Texture | |

| PartNo | Pos | Qty | Name | Specifications |
|---|---|---|---|---|
| 60143334-17 | 1 | 1 | Loader beam w. bushings | Black Texture |
| 60045911-17 | 2 | 2 PCS | Support leg | Black Texture |
| 60018637 | 3 | 2 | Link w. bushings | Glossy Black |
| 60052804 | 3* | 2 | Link w. bushings | Glossy Black *for loaders with Euro/SMS |
| 60062380-17 | 4 | 4 | Link | Black Texture |
| 5215219 | 5 | 1 | Indicator rod | |
| 5215209 | 6 | 1 | Holder kit | |
| 5215227 | 7 | 1 | Spacer | |
| 5013110 | 8 | 1 | Washer | BRB 10.5x22x2 |
| 5050605 | 9 | 1 | Screw | MC6S 10x50 Loc |
| 60121712 | 10 | 1 | Cover LH | DM |
| 60121711 | 11 | 1 | Cover RH | DM |
| 60121260 | 12 | 1 | Centre Cover | |
| 5051982 | 13 | 10 | Screw | M6x8 |
| 60122283-1 | 14 | 1 | Protection plate | Glossy Black |
| 60126088 | 15 | 1 | Cover LH | |
| 60126087 | 16 | 1 | Cover RH | |
| 5051983 | 17 | 2 | Screw | M6x40 |
| 60121419 | 18 | 2 | Hose guide | |
| 5053920 | 19 | 2 | Screw | MC6S M8x10 |
| 60000350 | 20 | 2 | Pivot Pin | D=40, L=96 mm |
| 60018047 | 21 | 2 | Pivot Pin | D=30, L=96mm |
| 60004177 | 22 | 4 | Pivot Pin | D=30, L=80mm |
| 60003247 | 23 | 2 | Pivot Pin | D=35, L=127mm |
| 60018046 | 24 | 2 | Pivot Pin | D=30, L=127mm |
| 5050608 | 25 | 15 | Screw | MC6S M10x20 Loc |
| 5215131 | 26 | 16 | Locking cover | |
| 60008692 | 27 | 14 | Plastic cover | |
| 60107382 | 28 | 2 | Plastic cover | |
| 5053656 | 29 | 2 | Screw | M8x60 |
| 60117642 | 30 | 1 | Clamp plate | |
| 60117558 | 31 | 1 | Hose clamp | Upper part |
| 60117559 | 32 | 1 | Hose clamp L3 | Upper part |
| 60129942 | 33 | 1 | Hose clamp | Lower part |
| 5011921 | 34 | 1 | Nut | M6MF M8 |
| 60011125 | 35 | 2 | Cover | |
| 60021154 | 36 | 4 | Plug | |
| 60121717 | 37 | 2 | Hose guide | |
| 5002077 | 38 | 2 | Screw | M6S 10x30 |
| 5002058 | 39 | 2 | Screw | M6S 8x16 |
| 60120968 | 40 | 2 | Edge cover | 19,5 mm |
| 60008713 | 41 | 2 | Edge cover | |


© 2025 Jost