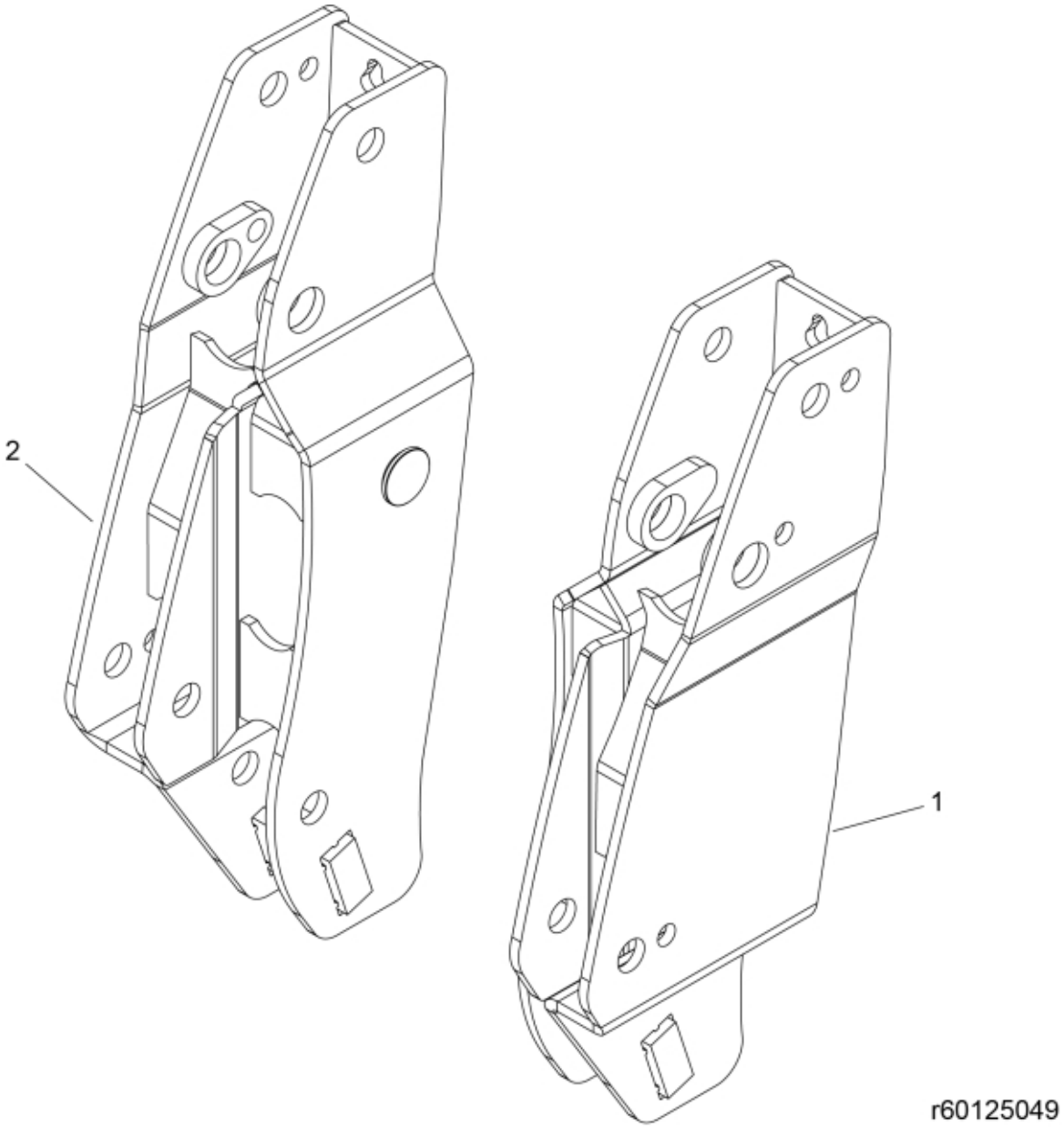

© 2025 Jost

Description	MSL
Part assemblies	Bearing box US

PartNo	Pos	Qty	Name	Specifications
60125050-7	1	1	Bearing box LH	Quicke Grey
60125051-7	2	1	Bearing box RH	Quicke Grey

© 2025 Jost