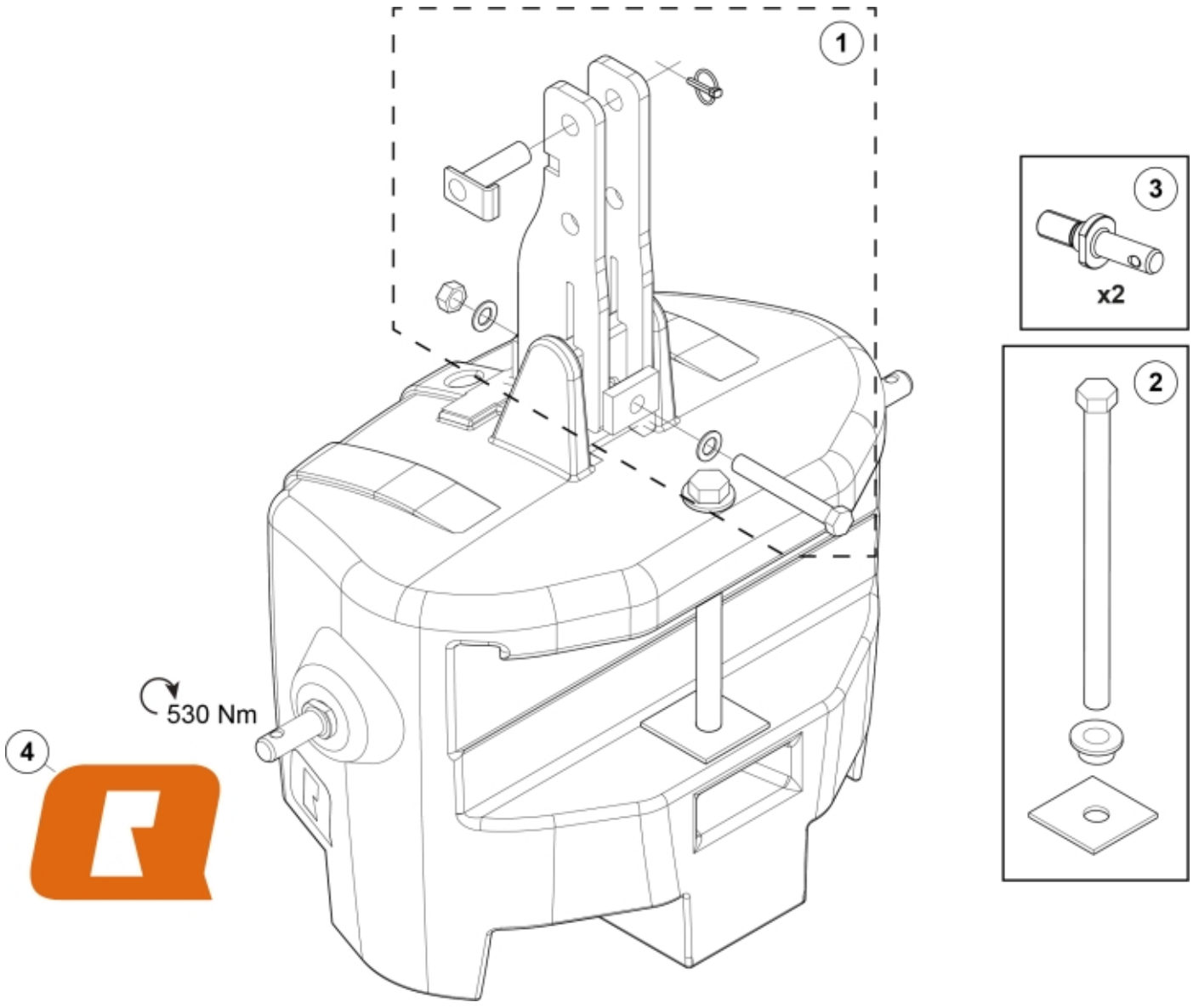

© 2025 Jost

Description	600 kg
Part assemblies	Q-bloq JD multi-attach

PartNo	Pos	Qty	Name	Specifications
60135123	1	1	Bracket kit	
60135177	2	1	Screw kit	
60135119	3	1	Pin kit	
60056616	4	2	Decal	"Q" medium 110mm

© 2025 Jost