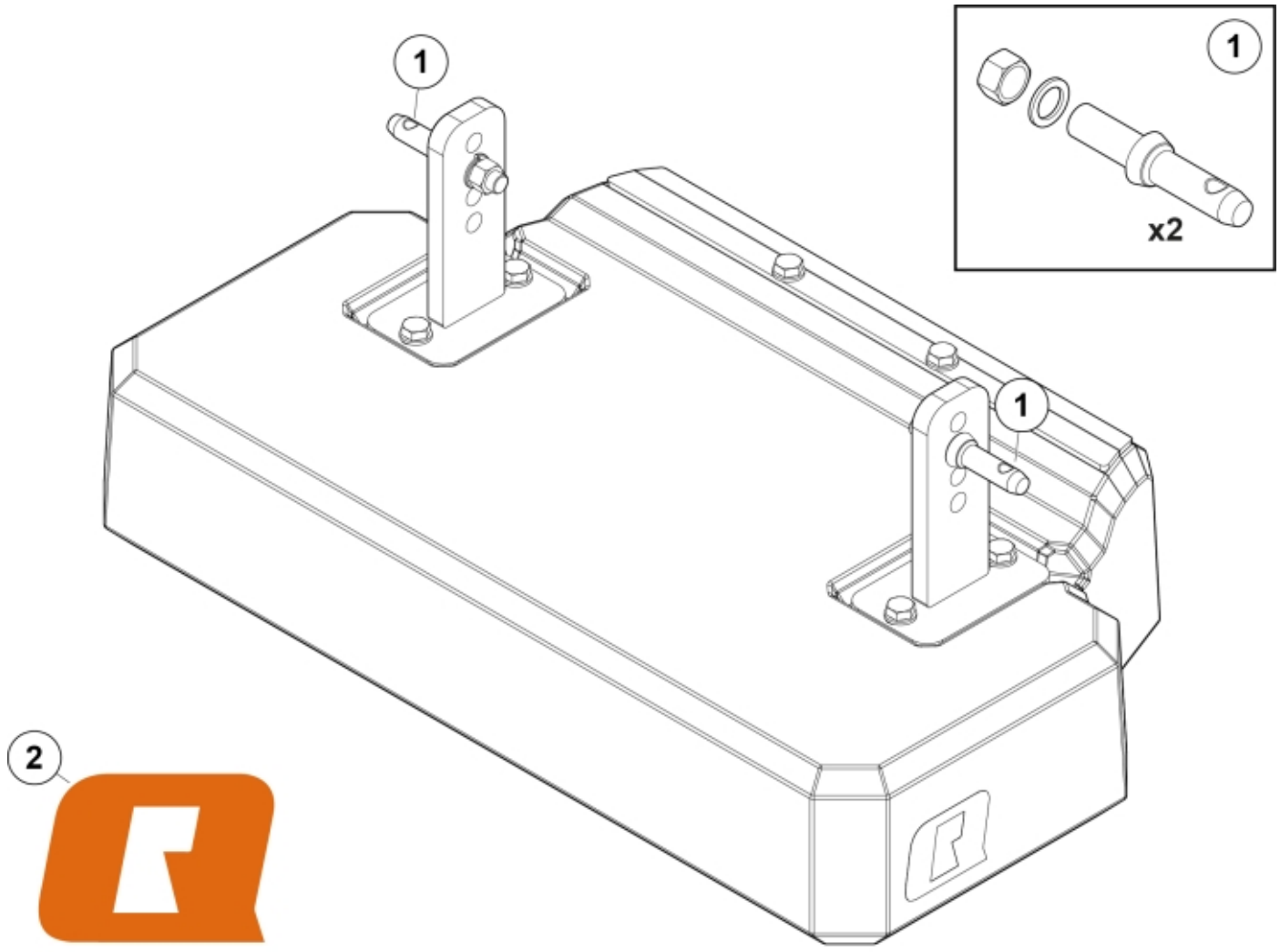

r11257041_42

© 2025 Jost

Description	450 kg
Part assemblies	Q-bloq C concrete

PartNo	Pos	Qty	Name	Specifications
60135233	1	1	Pin kit	
60056616	2	2	Decal	"Q" medium 110mm

© 2025 Jost