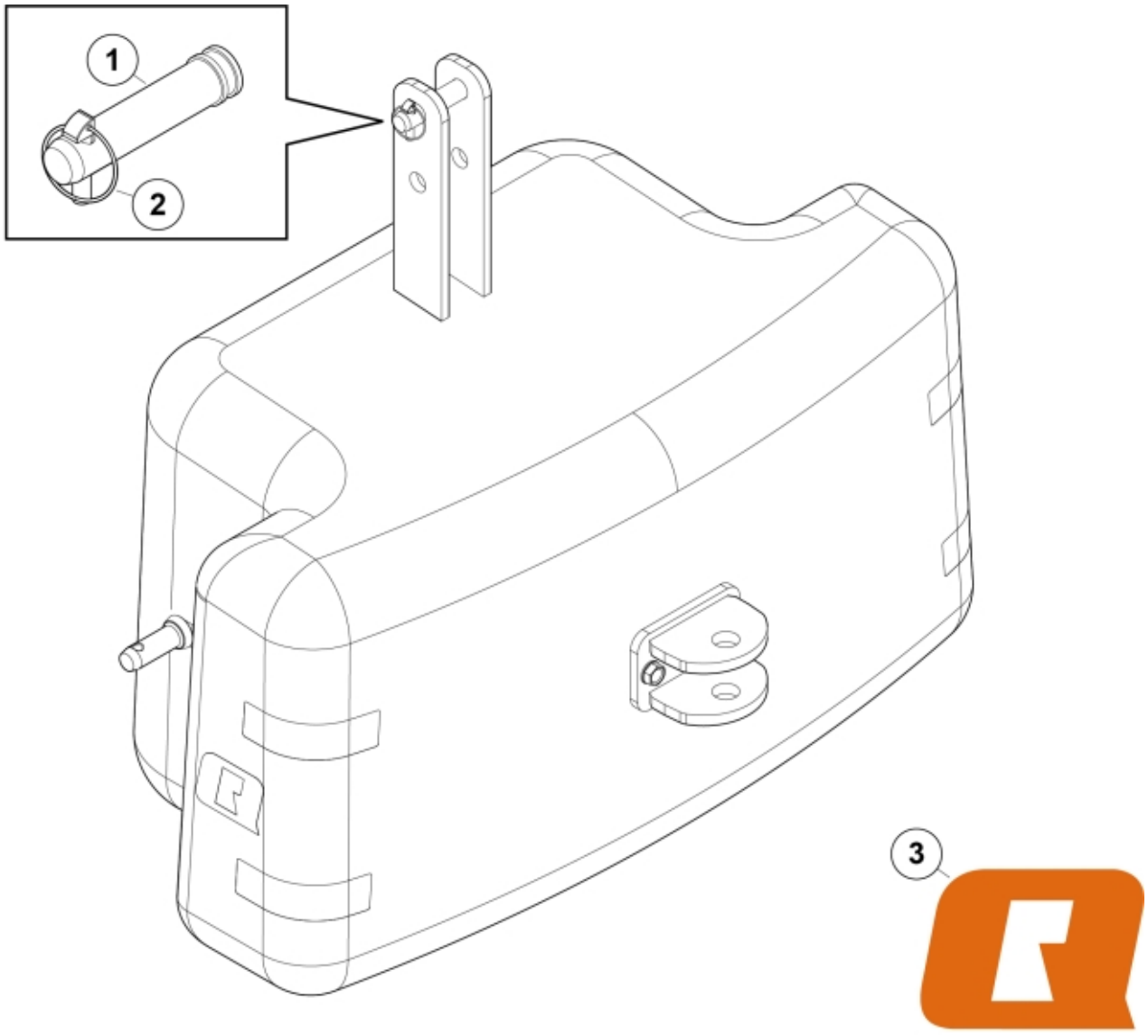

r11257035_36_37_38_39_40

© 2025 Jost

Description	900 kg
Part assemblies	Q-bloq concrete

PartNo	Pos	Qty	Name	Specifications
60135236	1	1	Pin	
5017002	2	1	Linch pin	
60056616	3	2	Decal	"Q" medium 110mm

© 2025 Jost