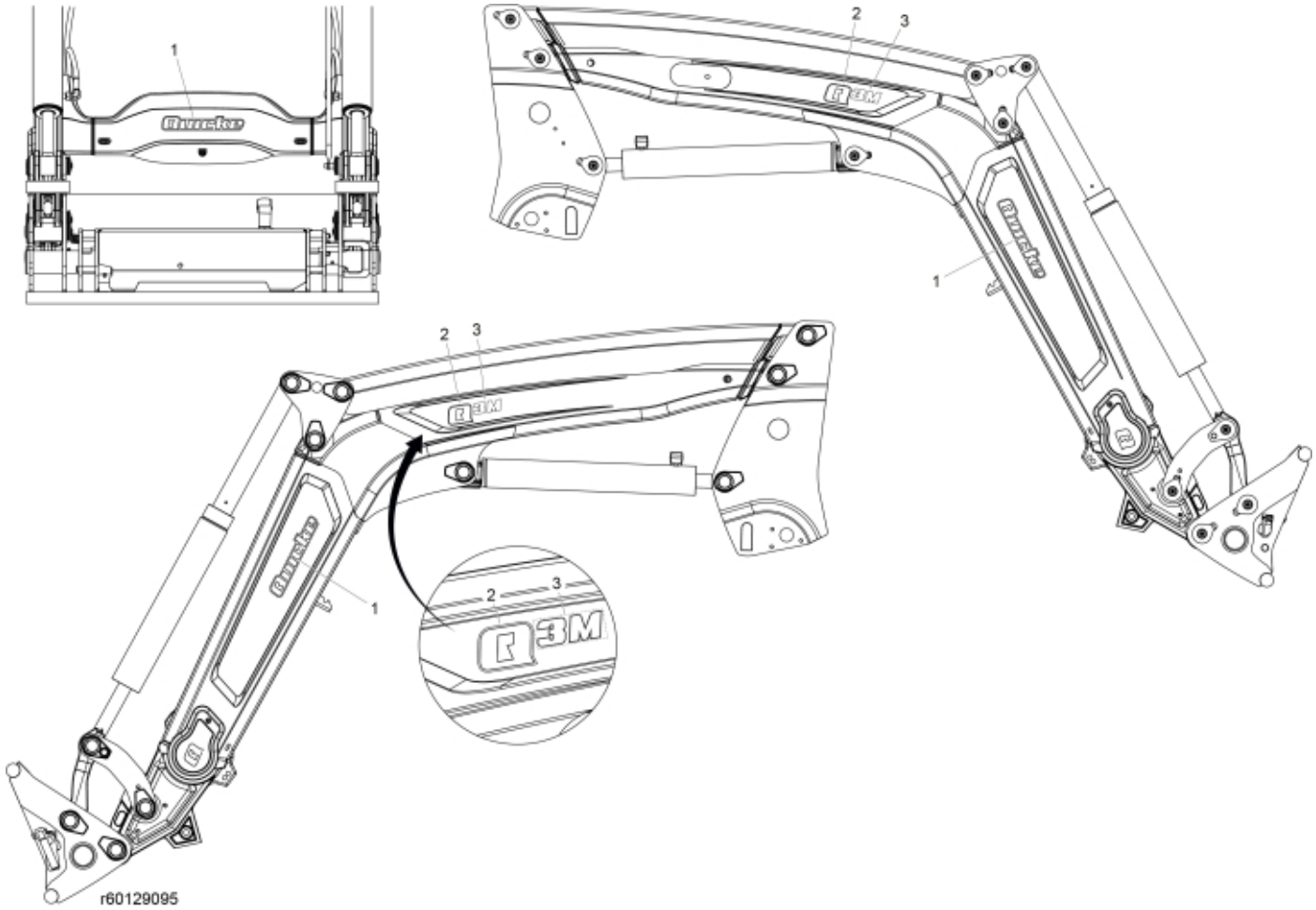

© 2025 Jost

Description	Q3M
Part assemblies	Decals
Specification	Year From: 5/1/2026 12:00:00 AM

PartNo	Pos	Qty	Name	Specifications
60124010	1	3	Decal, Brand	Quicke 3D
60123926	2	2	Decal	"Q" 3D
60124137	3	2	Decal, Model	"3M"

© 2025 Jost