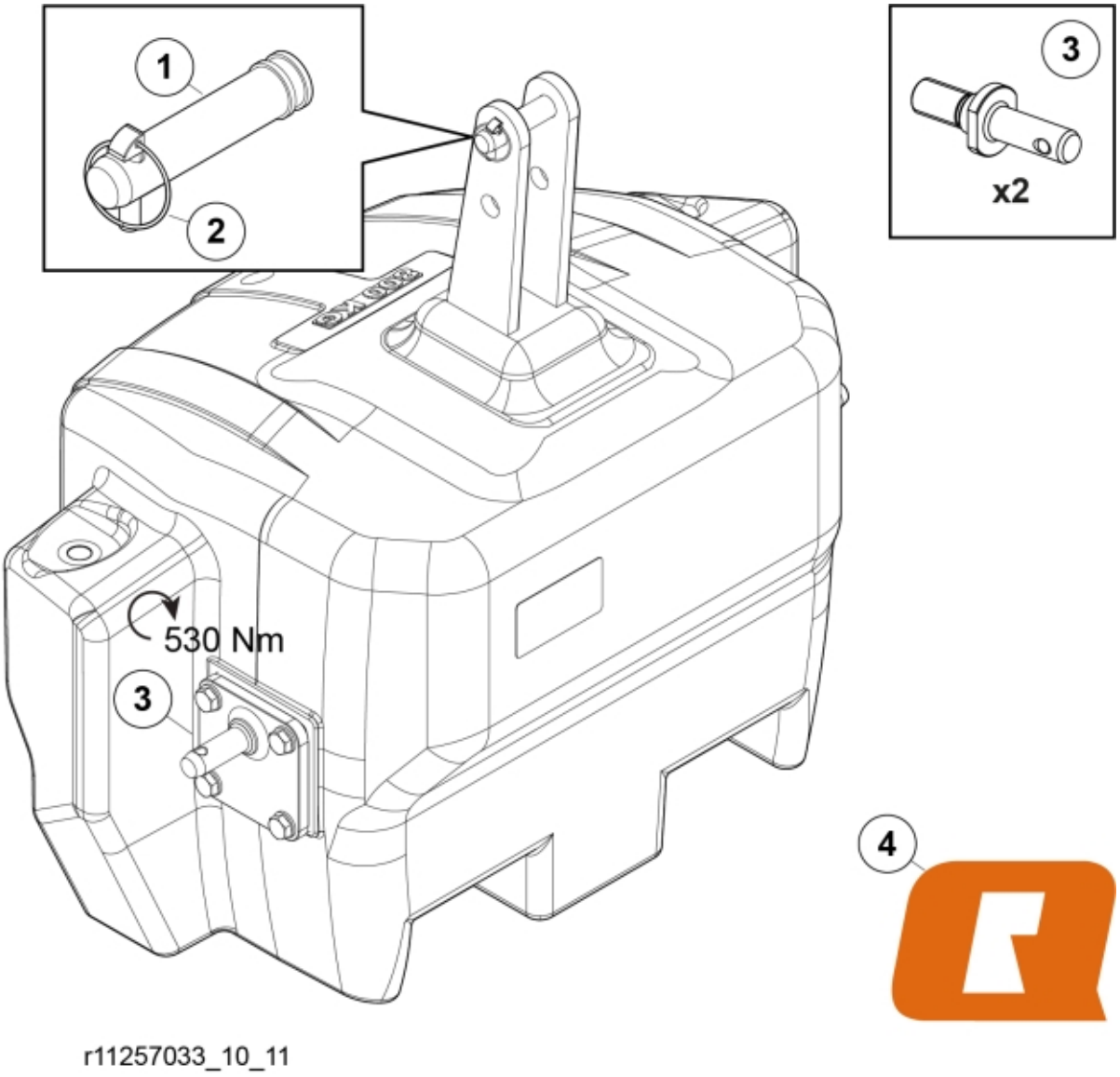

r11257033_10_11

© 2025 Jost

Description	600 kg
Part assemblies	Q-bloq mineral

PartNo	Pos	Qty	Name	Specifications
60135204	1	1	Pin	
5017002	2	1	Linch pin	
60135207	3	1	Pin kit	
60056616	4	2	Decal	"Q" medium 110mm

© 2025 Jost