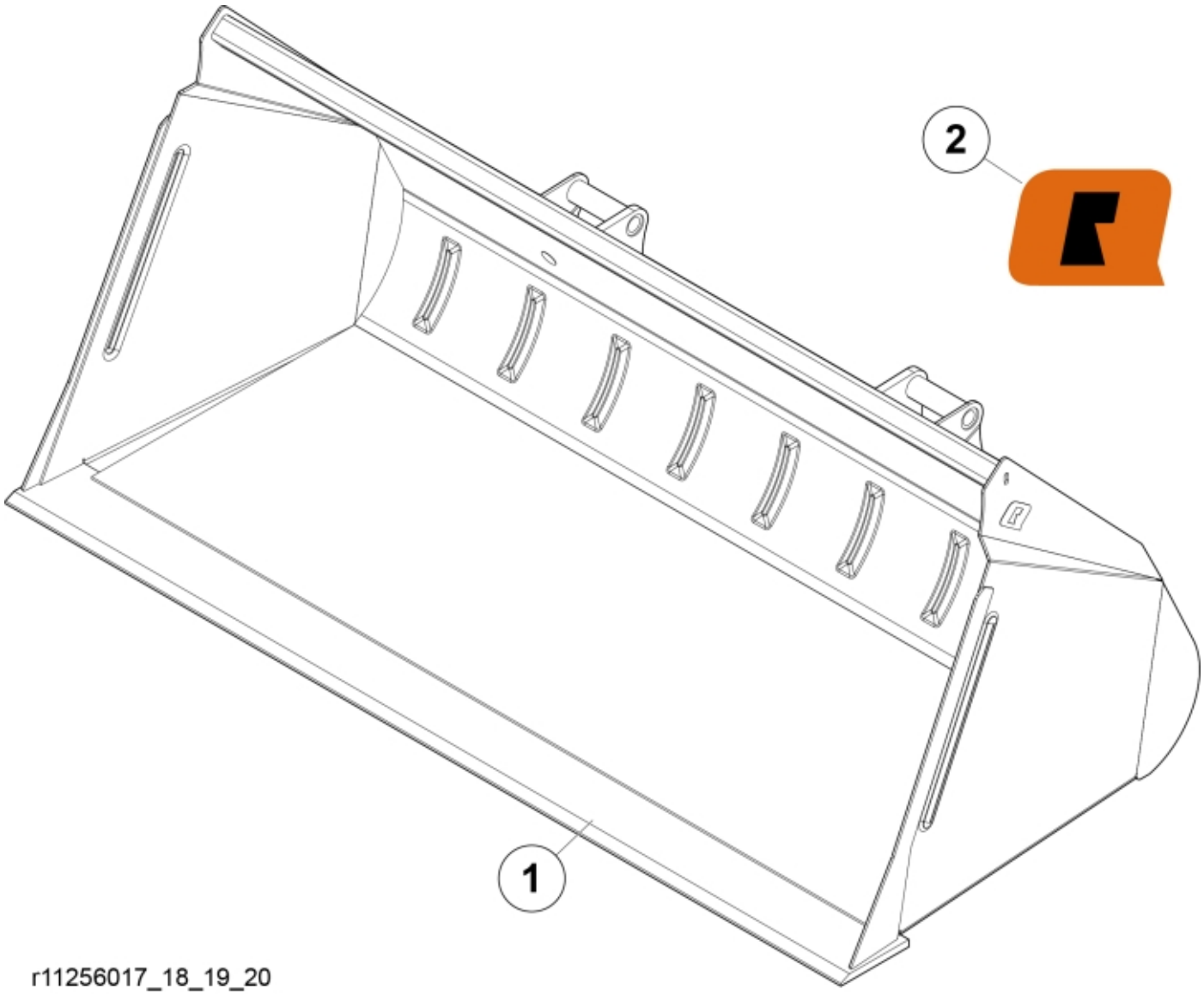

r11256017_18_19_20

© 2025 Jost

Part assemblies Bucket VL 225 MX

PartNo	Pos	Qty	Name	Specifications
60044762	1	1 PCS	Cutting edge	
60049053	2	2	Decal	"Q" small 80x57
5022119		2	Plug	

© 2025 Jost