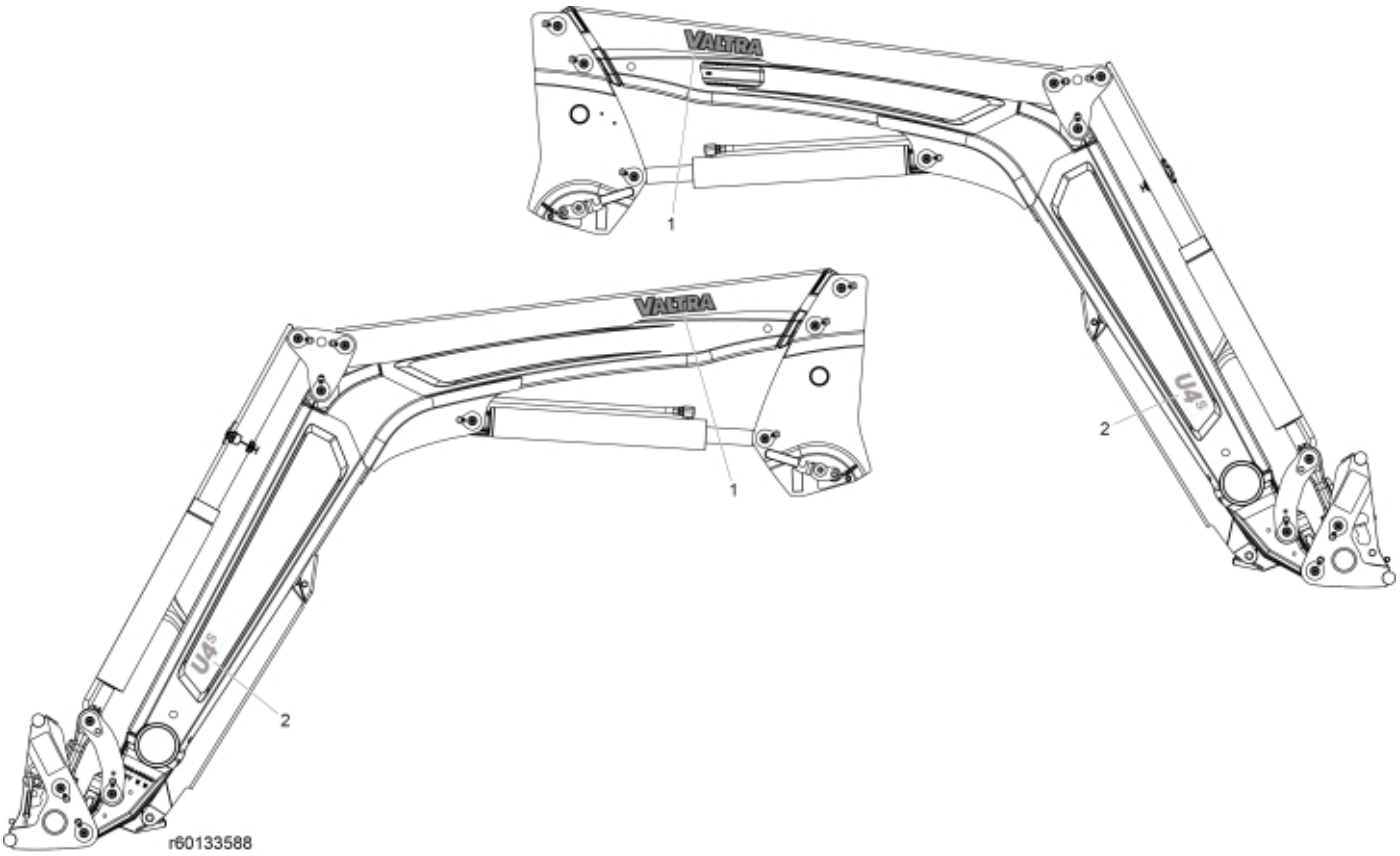

© 2025 Jost

Description	U4S
Part assemblies	Decals

PartNo	Pos	Qty	Name	Specifications
60108055	1	2 PCS	Decal, Brand	Valtra
60135052	2	2	Decal, Model	U4S

© 2025 Jost