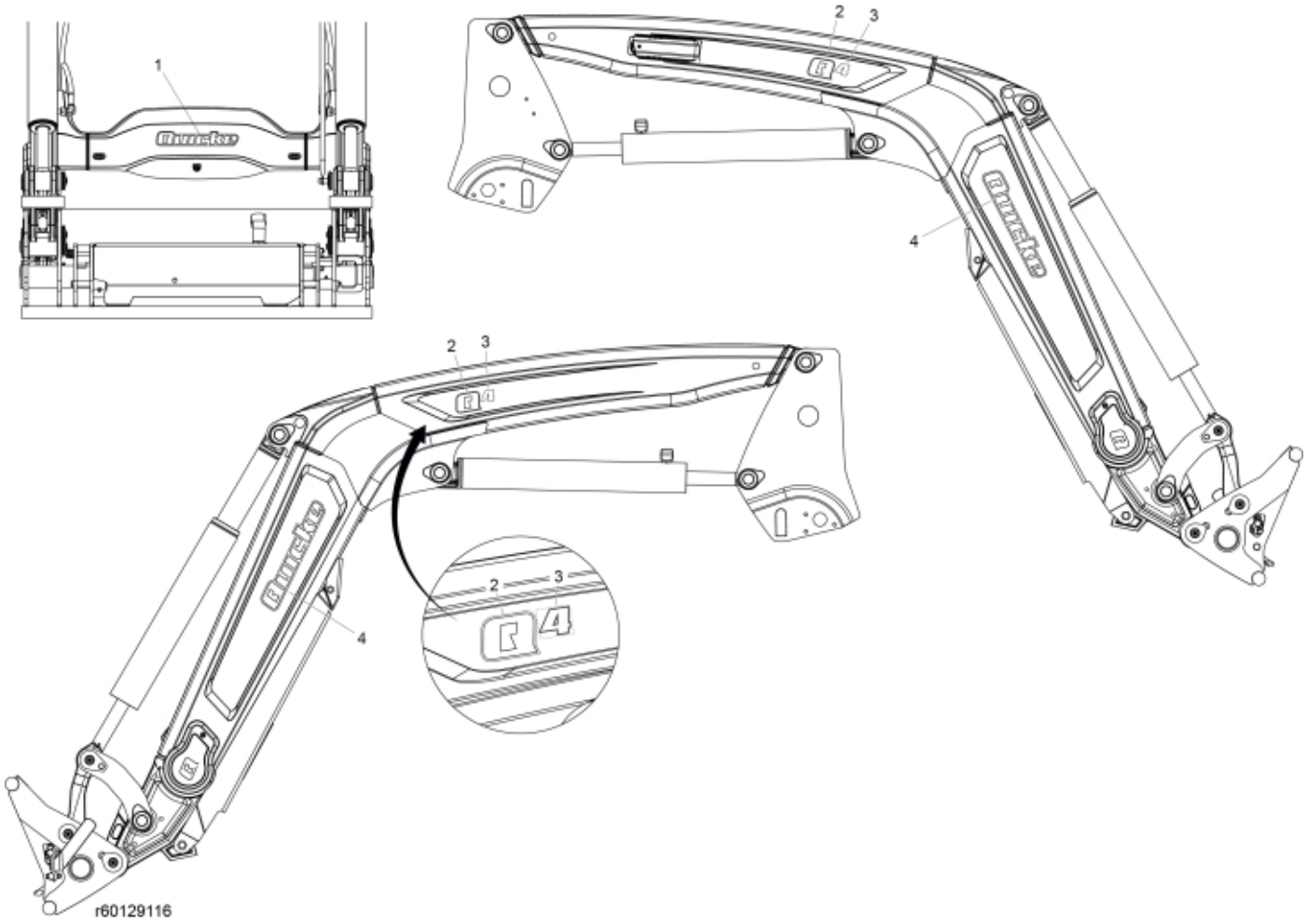



© 2025 Jost

| | |
|---|---|
| **Description** | Q4 |
| **Part assemblies** | Decals |
| **Specification** | Year From: 5/1/2026 12:00:00 AM |

| PartNo | Pos | Qty | Name | Specifications |
|---|---|---|---|---|
| 60124010 | 1 | 1 | Decal, Brand | Quicke 3D |
| 60123926 | 2 | 2 | Decal | "Q" 3D |
| 60124235 | 3 | 2 | Decal, Model | "4" |
| 60123398 | 4 | 2 | Decal, Brand | Quicke 3D |


© 2025 Jost