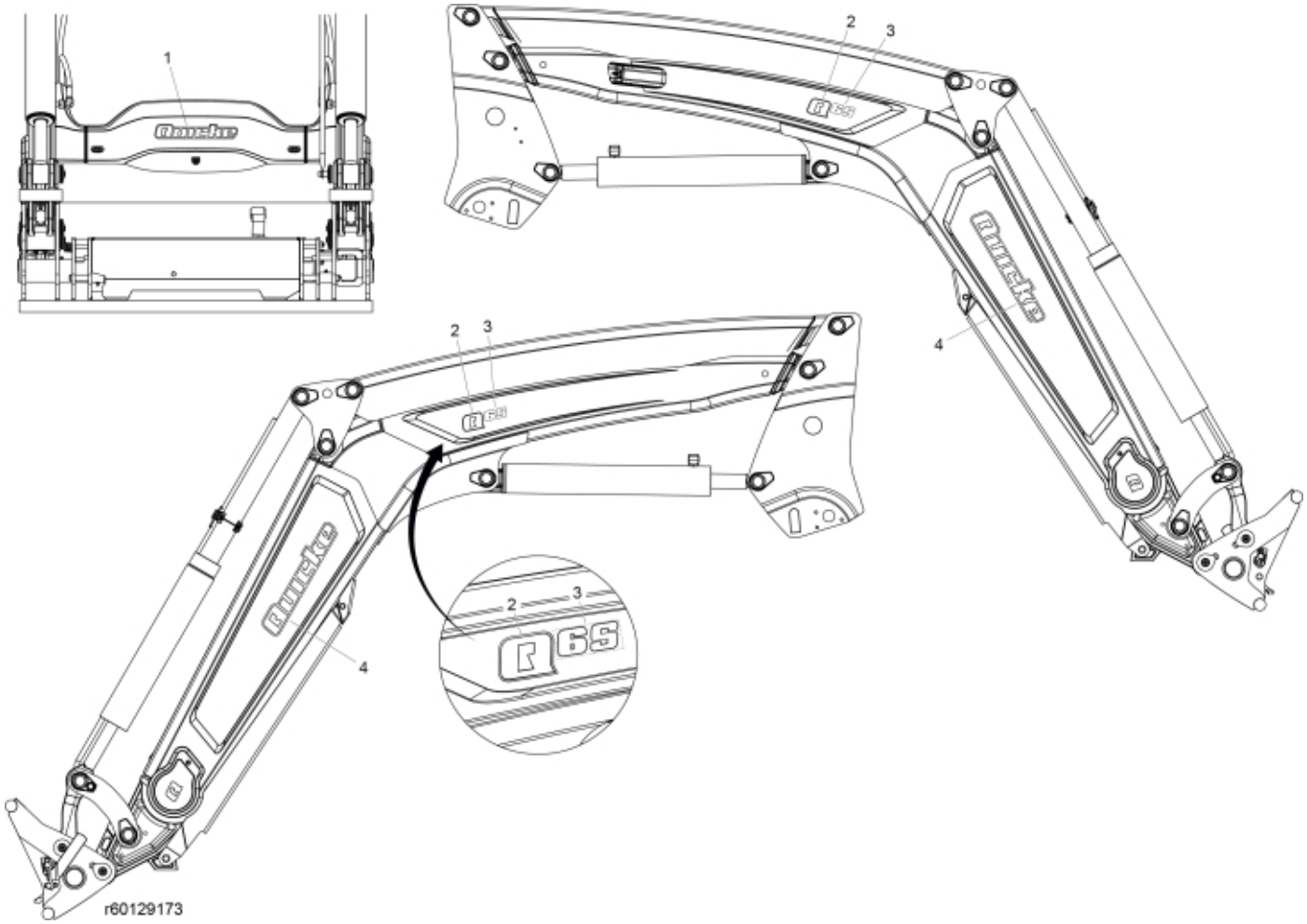

© 2025 Jost

Description	Q6S
Part assemblies	Decals
Specification	Year From: 5/1/2026 12:00:00 AM

PartNo	Pos	Qty	Name	Specifications
60124010	1	1	Decal, Brand	Quicke 3D
60123926	2	2	Decal	"Q" 3D
60124133	3	2	Decal, Model	"6S"
60124011	4	2	Decal, Brand	Quicke 3D

© 2025 Jost