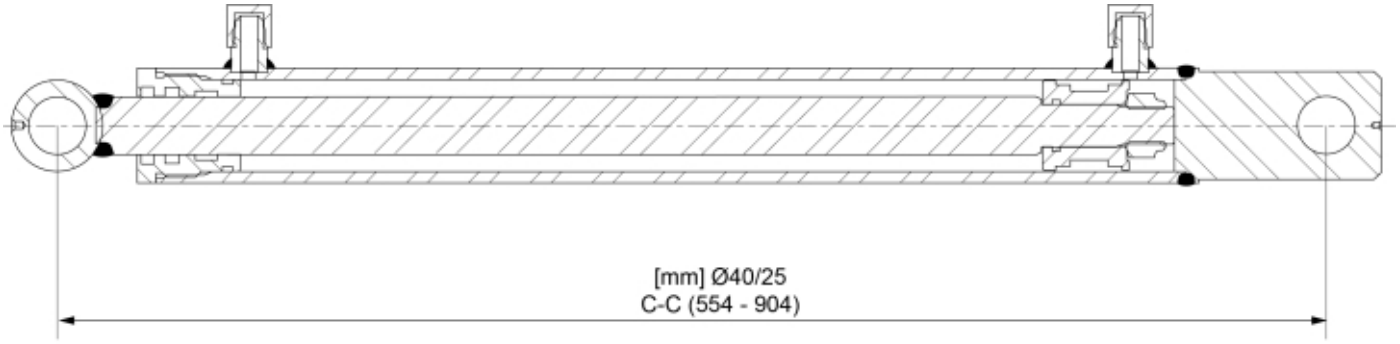


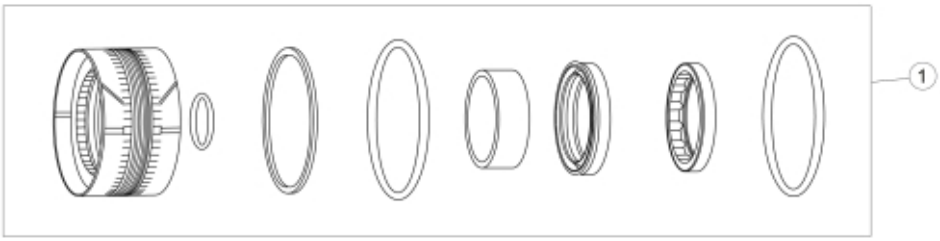


r60116836


© 2025 Jost

| | |
|---|---|
| **Description** | 40/25 |
| **Part assemblies** | Lift Cylinder |
| **Specification** | Specification: Glossy Black |

| PartNo | Pos | Qty | Name | Specifications |
|---|---|---|---|---|
| 4501377 | 1 | 1 | Seal kit | |


© 2025 Jost