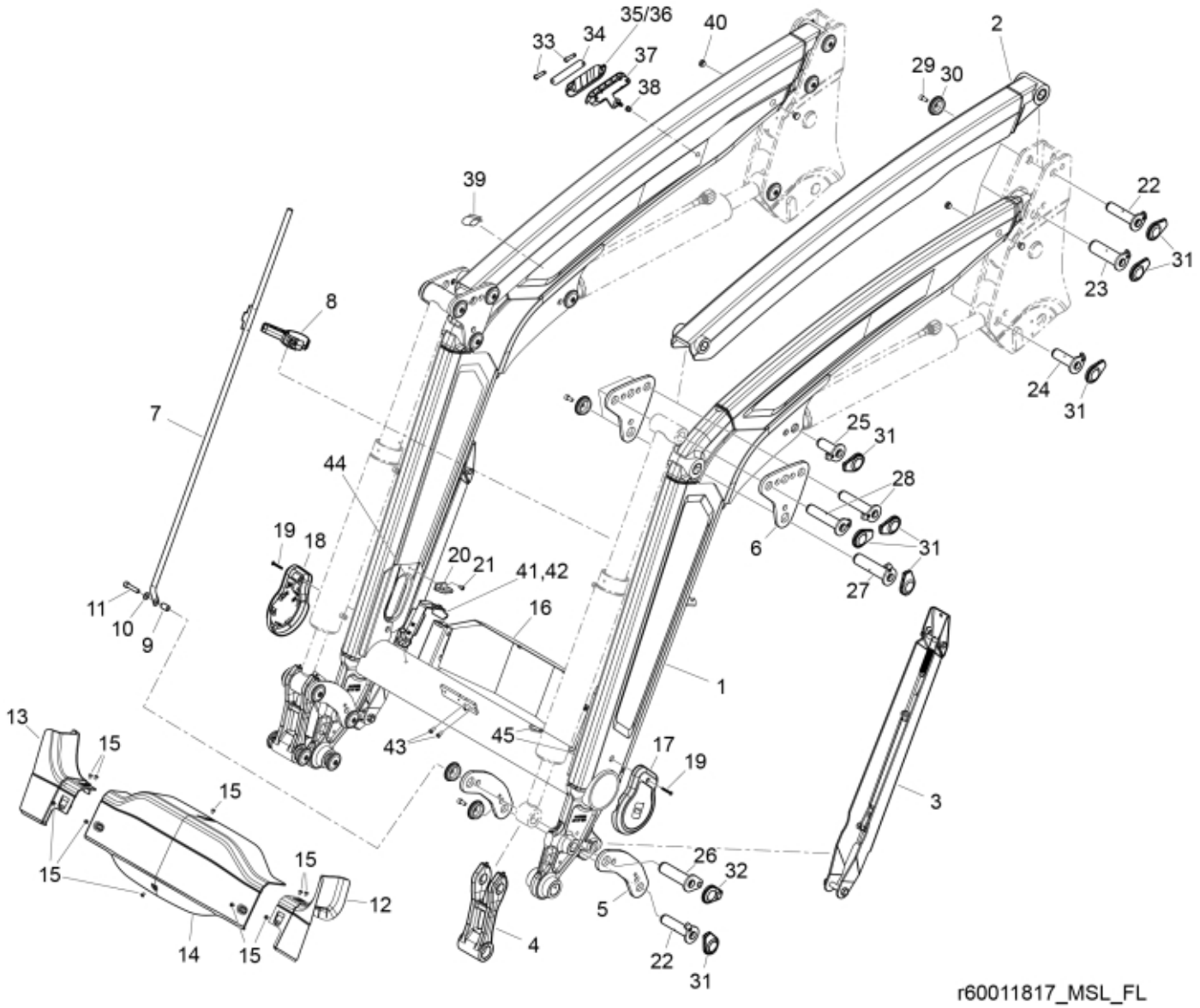
35/36
40
2
33
34
37
38
29
30
39
22
31
23
8
24
31
7
25
31
44
28
19
18
20
21
41,42
6
31
27
16
11
10
9
1
13
15
43
45
17
19
3
15
15
26
32
15
12
5
15
14
15
4
22
31
r60011817_MSL_FL

© 2025 Jost

Part assemblies Specification		Loader beam Specification: Black Texture		
PartNo	**Pos**	**Qty**	**Name**	**Specifications**
60143336-17	1	1	Loader beam w. bushings	Black Texture
60103806-17	2	2	Parallel rod w. bushings	Black Texture
4501225-17	3	2	Support leg	Black Texture
60018638	4	2	Link w. bushings	Glossy Black
60052806	4*	2	Link w. bushings	Glossy Black *for loaders with Euro/SMS
60052807	4**	2	Link w. bushings	Glossy Black *for loaders with BigBM
60062381-17	5	4	Link	Black Texture
60004126-17	6	4	Knee link	Black Texture
5215217	7	1	Indicator rod	
5215208	8	1	Holder kit	
5215227	9	1	Spacer	
5013110	10	1	Washer	BRB 10.5x22x2
5050605	11	1	Screw	MC6S 10x50 Loc
60122110	12	1	Cover LH	DL
60122109	13	1	Cover RH	DL
60121260	14	1	Centre Cover	
5051982	15	10	Screw	M6x8
60122283-1	16	1	Protection plate	Glossy Black
60126090	17	1	Cover LH	
60126089	18	1	Cover RH	
5051983	19	2	Screw	M6x40
60121419	20	2	Hose guide	
5053920	21	2	Screw	MC6S M8x10
60018053	22	4	Pivot Pin	D=35, L=127mm
60004503	23	2	Pivot Pin	D=45, L=129mm
60018058	24	2	Pivot Pin	D=35, L=96mm
60018059	25	2	Pivot Pin	D=35, L84mm
60003248	26	2	Pivot Pin	D=40, L=127
60019828	27	2	Pivot Pin	D=40, L=147mm
60000355	28	4	Pivot Pin	D=35, L=147mm
5050608	29	21	Screw	MC6S M10x20 Loc
5215131	30	22	Locking cover	
60008692	31	20	Plastic cover	
60107382	32	2	Plastic cover	
5053656	33	2	Screw	M8x60
60117642	34	1	Clamp plate	
60117558	35	1	Hose clamp	Upper part
60117559	36	1	Hose clamp L3	Upper part
60129942	37	1	Hose clamp	Lower part
5011921	38	1	Nut	M6MF M8
60011125	39	2	Cover	
60021154	40	4	Plug	
60121717	41	2	Hose guide	
5002077	42	2	Screw	M6S 10x30
5002058	43	2	Screw	M6S 8x16
60120968	44	2	Edge cover	19,5 mm
60008713	45	2	Edge cover	

© 2025 Jost