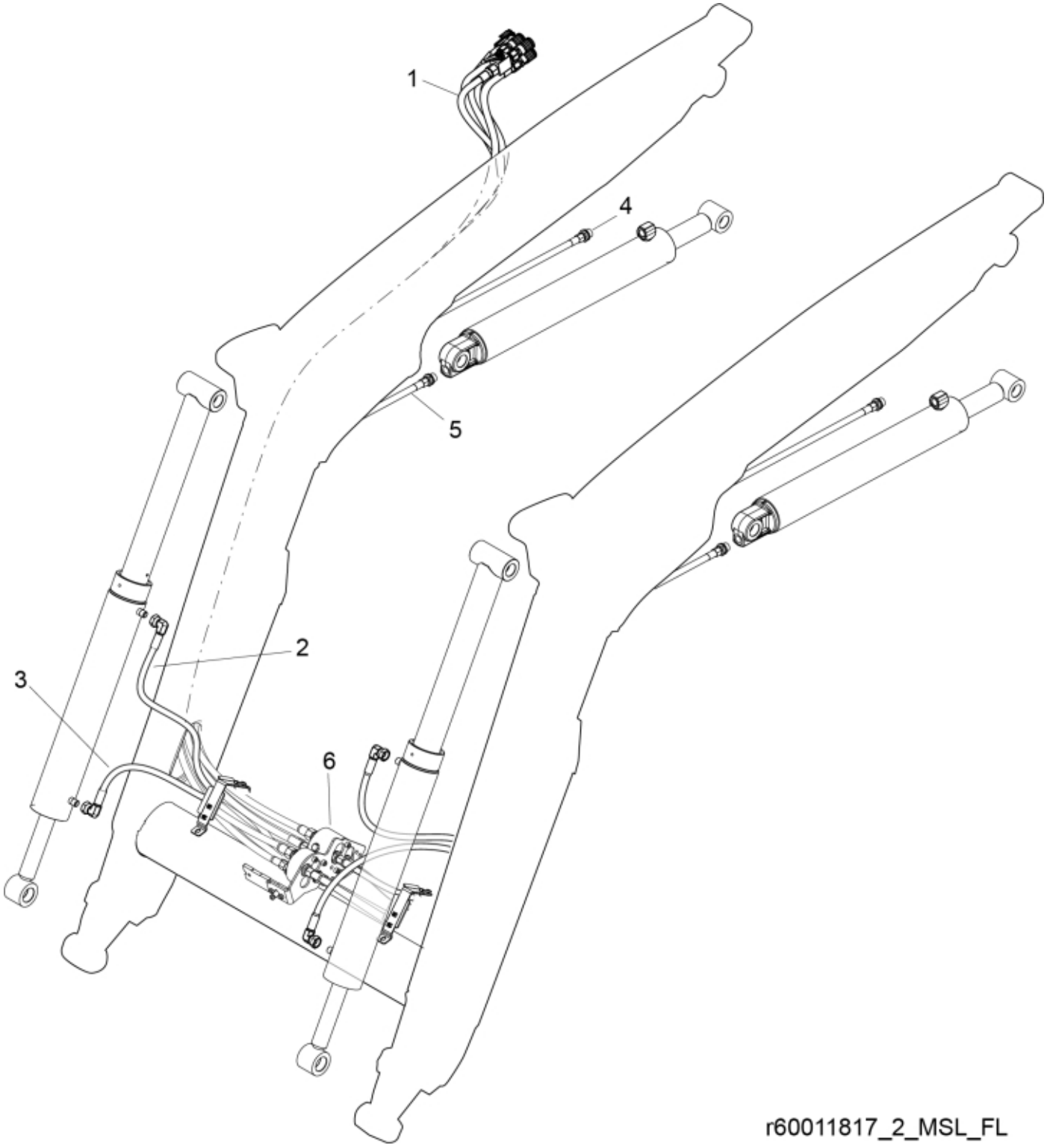

© 2025 Jost

Part assemblies Hydraulics

Hydraulics:Cylinder hoses

PartNo	Pos	Qty	Name	Specifications
- - -	1	1	Main hose kit	See separate part list
60006749	2	2	Hose	3/8" L=1130 3/8GRLM - 3/8G90LM
60006748	3	2	Hose	3/8" L=1050 3/8GRLMA - 3/8G90LMA
60006767	4	2	Hose	3/8" L=2520 3/8GRLMA - 3/8GRLMA
60006768	5	2	Hose	1/2" L=1840 1/2GRLMA - 1/2GRLMA
4500233	6	1	CVU Basic	MSL

© 2025 Jost