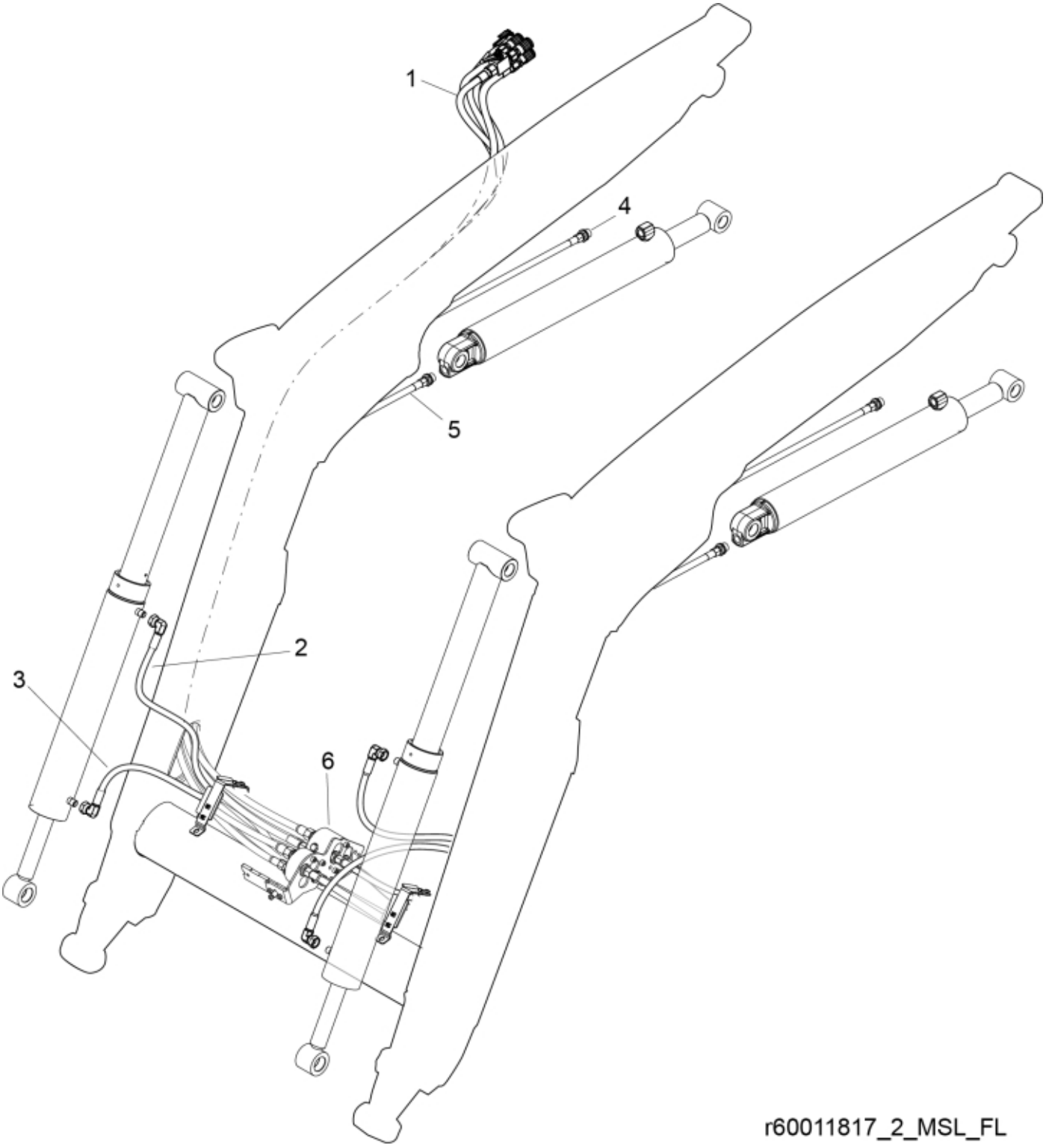

© 2025 Jost

Part assemblies	Hydraulics

Hydraulics:Cylinder hoses

PartNo	Pos	Qty	Name	Specifications
- - -	1	1	Main hose kit	See separate part list
60006749	2	2	Hose	3/8" L=1130 3/8GRLM - 3/8G90LM
60006748	3	2	Hose	3/8" L=1050 3/8GRLMA - 3/8G90LMA
60003883	4	2 PCS	Hose	3/8" L=2770 3/8GRLMA - 3/8GRLMA
60003884	5	2 PCS	Hose	1/2" L=2080 1/2GRLMA - 1/2GRLMA
4500233	6	1	CVU Basic	MSL

© 2025 Jost