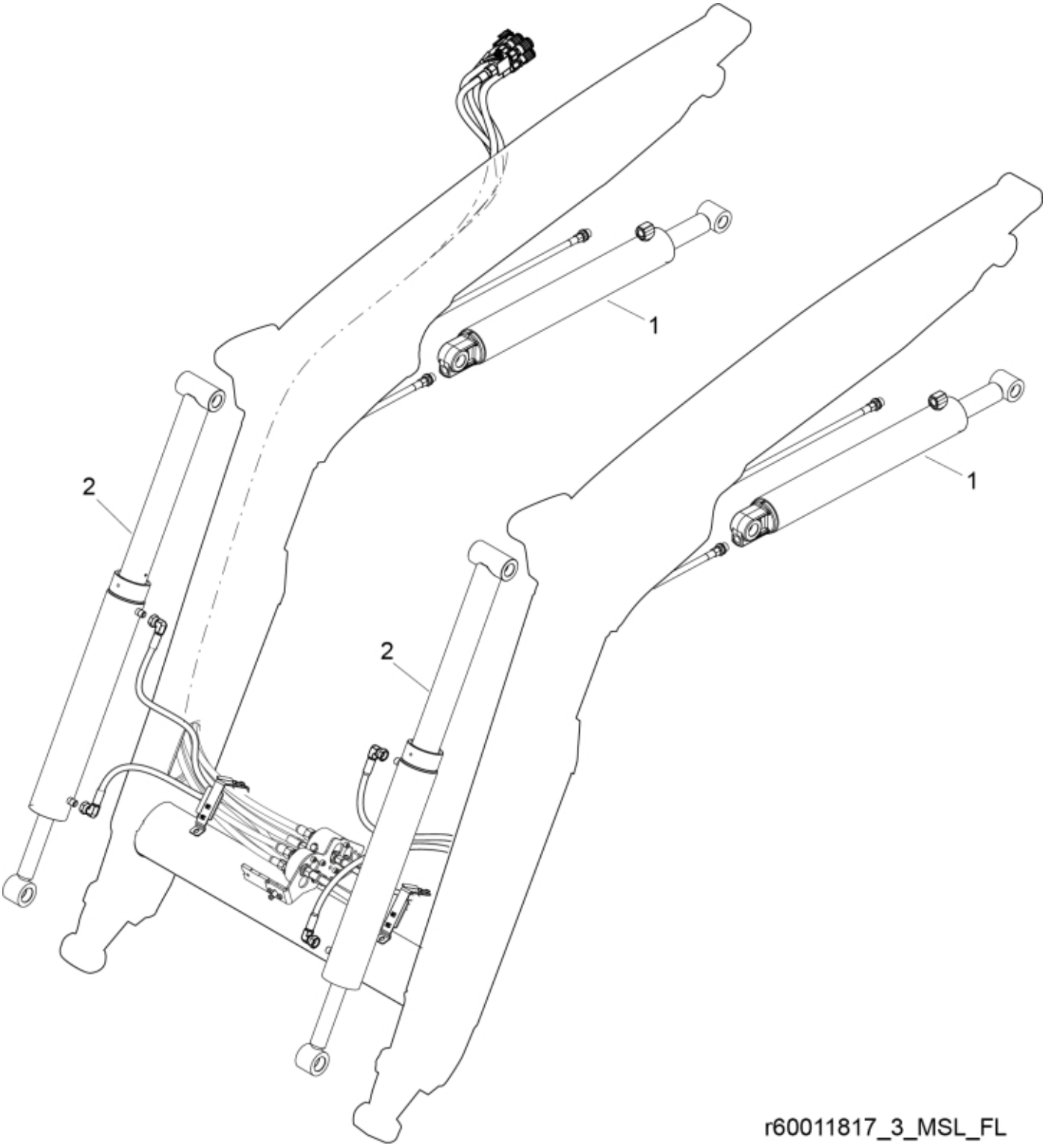

© 2025 Jost

Part assemblies	Cylinder

Cylinder:Cylinder part number is written on the cylinder itself. Have a look before searching for parts.

PartNo	Pos	Qty	Name	Specifications
60050758-1	1	2	Lift Cylinder	Glossy Black
60019007-1	2	2 PCS	Tilt Cylinder	Glossy Black

© 2025 Jost