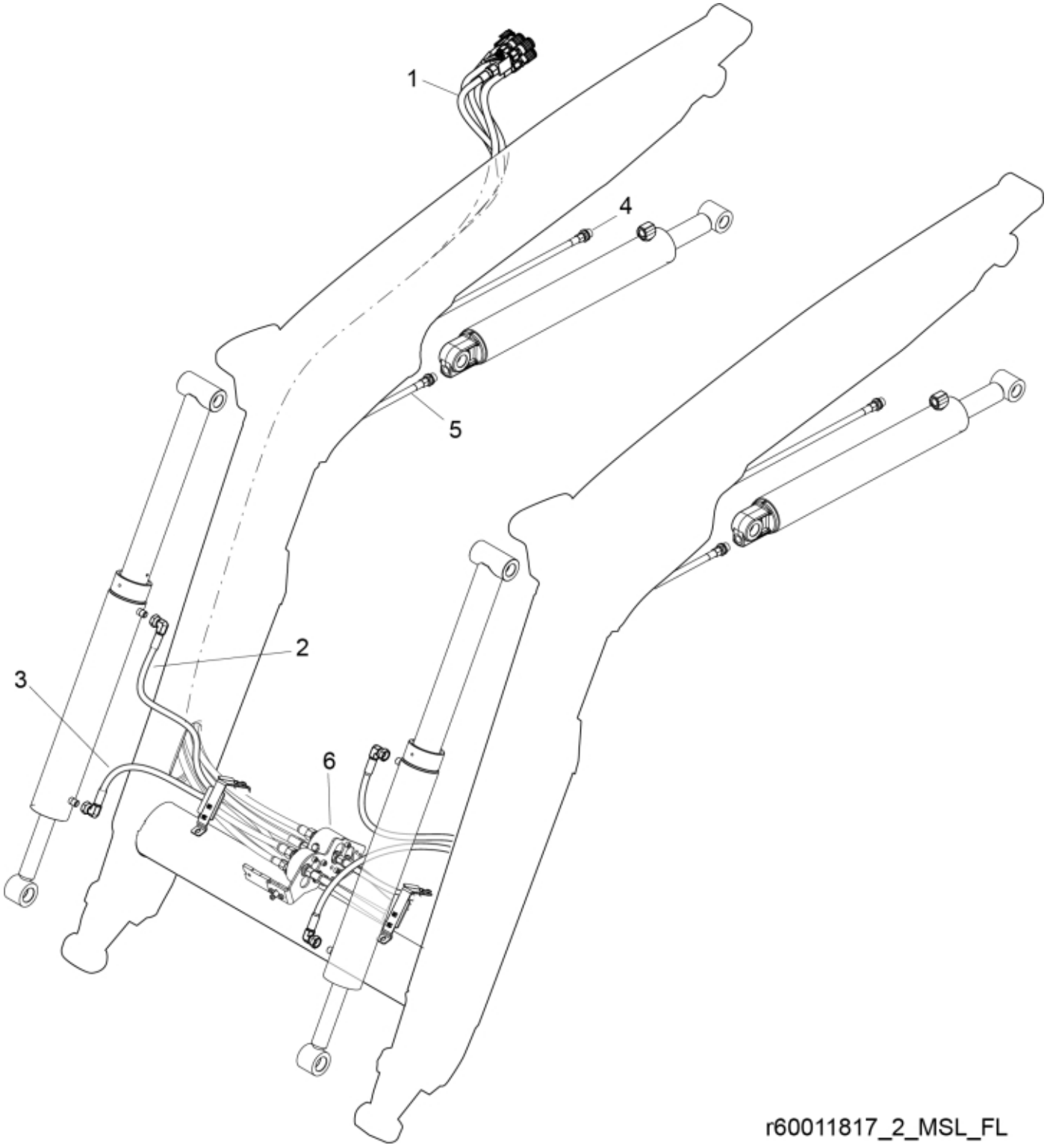



© 2025 Jost

**Part assemblies** Hydraulics

Hydraulics:Cylinder hoses

| PartNo | Pos | Qty | Name | Specifications |
|---|---|---|---|---|
| - - - | 1 | 1 | Main hose kit | See separate part list |
| 60006749 | 2 | 2 | Hose | 3/8" L=1130 3/8GRLM - 3/8G90LM |
| 60006748 | 3 | 2 | Hose | 3/8" L=1050 3/8GRLMA - 3/8G90LMA |
| 60026580 | 4 | 2 PCS | Hose | 3/8" L=2805 3/8GRLMA - 3/8GRLMA |
| 60026581 | 5 | 2 PCS | Hose | 1/2" L=2125 1/2GRLMA - 1/2GRLMA |
| 4500233 | 6 | 1 | CVU Basic | MSL |


© 2025 Jost