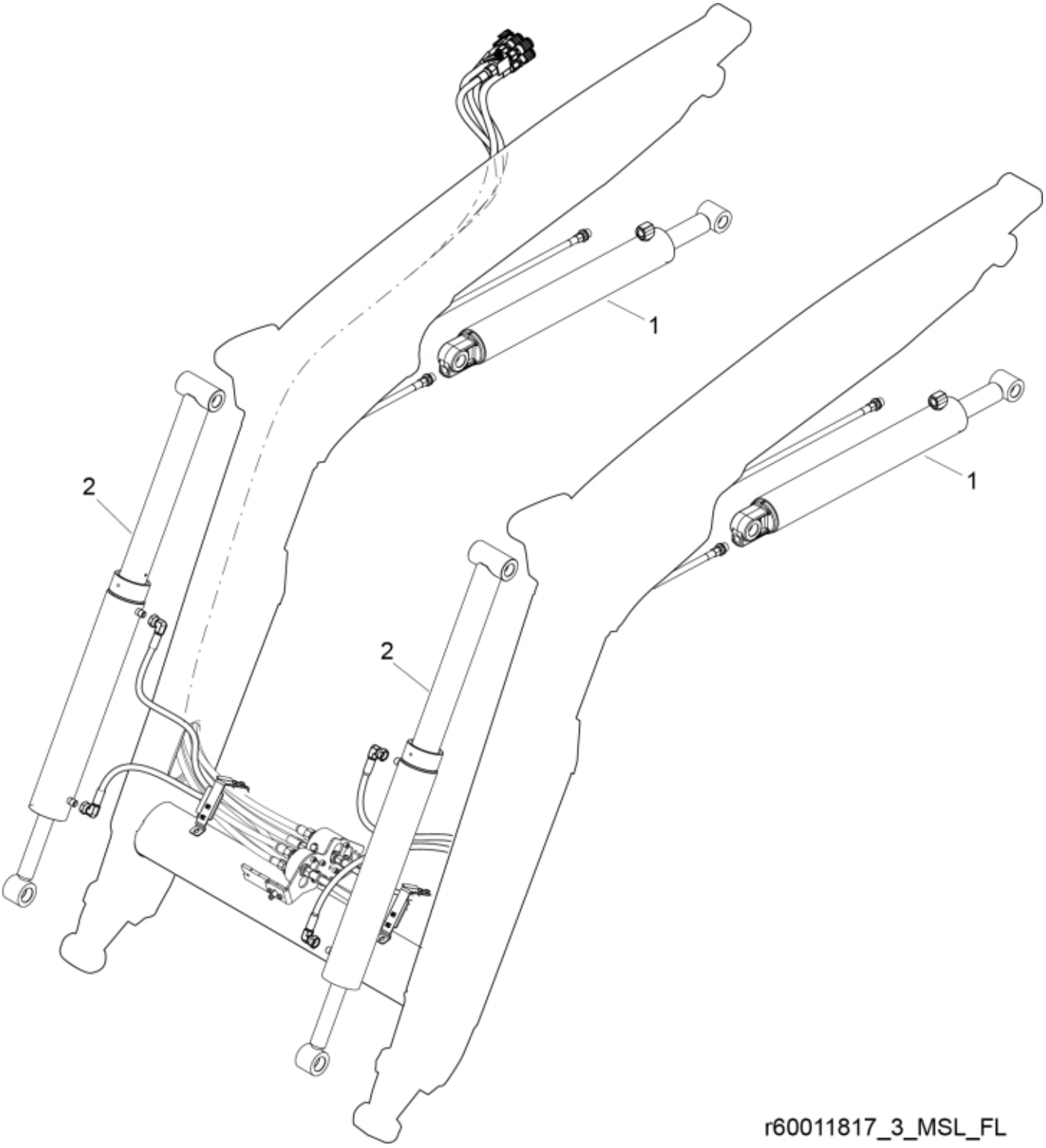

© 2025 Jost

Part assemblies	Cylinder

PartNo	Pos	Qty	Name	Specifications
60007352-1	1	2 PCS	Lift Cylinder	Glossy Black
60050744-1	2	2 PCS	Tilt Cylinder	Glossy Black

© 2025 Jost