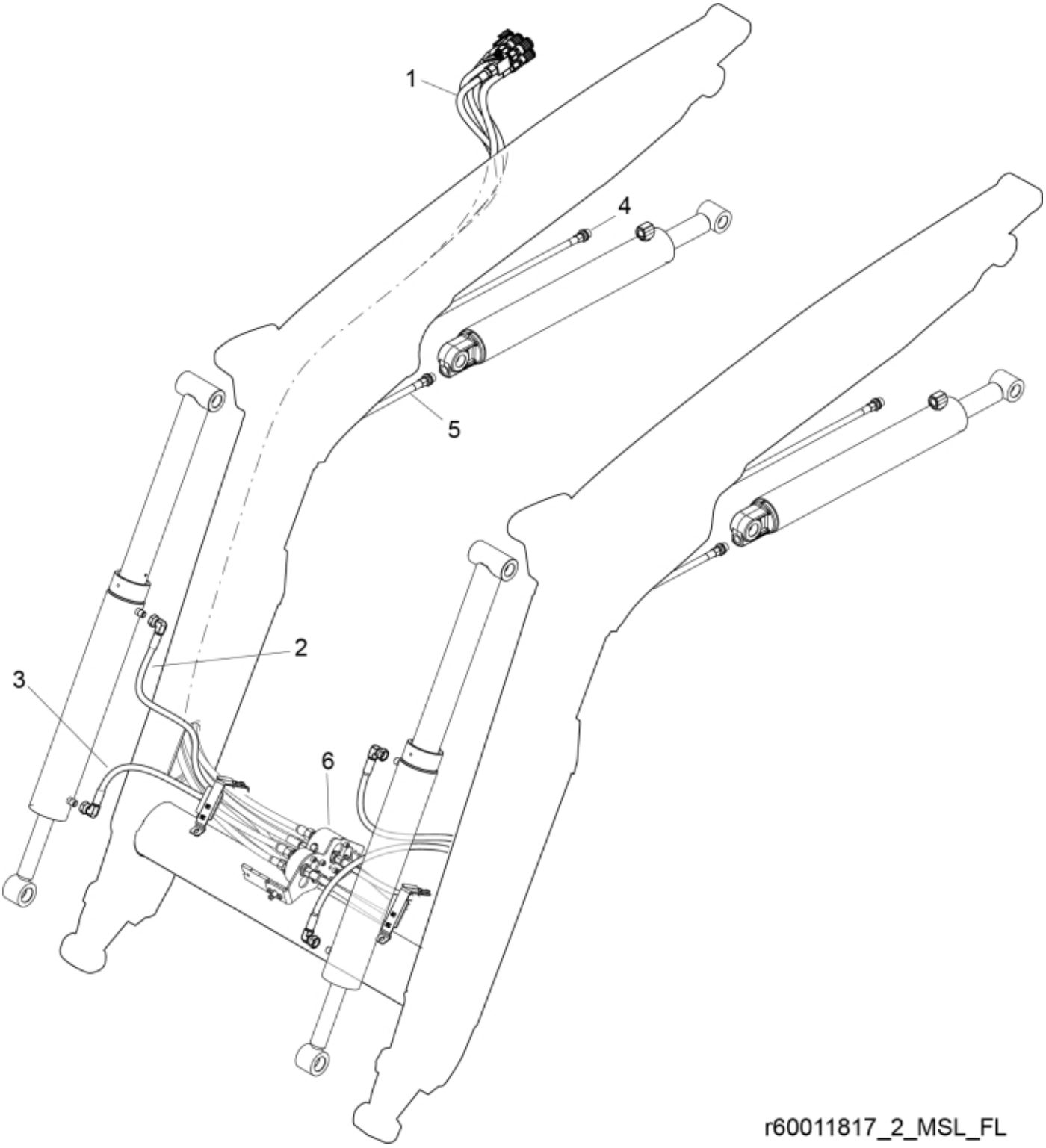

© 2025 Jost

Part assemblies Hydraulics

Hydraulics:Cylinder hoses

PartNo	Pos	Qty	Name	Specifications
- - -	1	1	Main hose kit	See separate part list
60132614	2	2	Hose	3/8" L=1240 3/8GRLM - 3/8G90LM
60006749	3	2	Hose	3/8" L=1130 3/8GRLM - 3/8G90LM
60006775	4	2 PCS	Hose	3/8" L=3020 3/8GRLMA - 3/8GRLMA
60006776	5	2 PCS	Hose	1/2" L=2205 1/2GRLMA - 1/2GRLMA
4500233	6	1	CVU Basic	MSL

© 2025 Jost