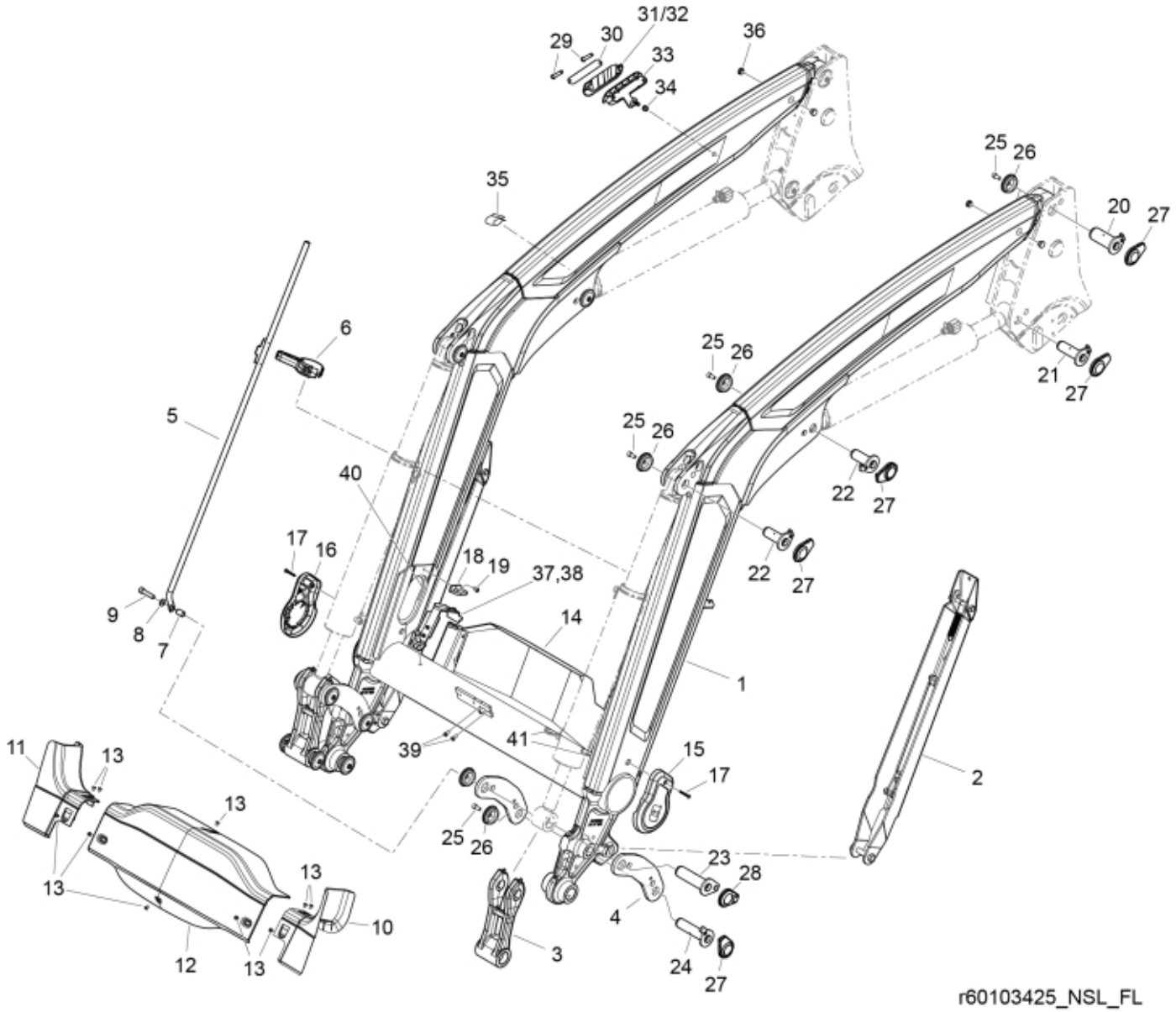
31/32
29
30
33
34
36
35
25
26
20
27
6
5
21
22
40
17
16
18
19
37,38
14
9
8
7
1
39
41
15
2
11
13
23
28
4
10
12
3
24
r60103425_NSL_FL

© 2025 Jost

Part assemblies Loader beam

PartNo	Pos	Qty	Name	Specifications
60143334-19	1	1	Loader beam w. bushings	MF Red
60045911-19	2	2	Support leg	MF Red
60018637	3	2	Link w. bushings	Glossy Black
60052804	3*	2	Link w. bushings	Glossy Black *for loaders with Euro/SMS
60062380-19	4	4	Link	MF Red
5215219	5	1	Indicator rod	
5215209	6	1	Holder kit	
5215227	7	1	Spacer	
5013110	8	1	Washer	BRB 10.5x22x2
5050605	9	1	Screw	MC6S 10x50 Loc
60121712	10	1	Cover LH	DM
60121711	11	1	Cover RH	DM
60121260	12	1	Centre Cover	
5051982	13	10	Screw	M6x8
60122283-1	14	1	Protection plate	Glossy Black
60126088	15	1	Cover LH	
60126087	16	1	Cover RH	
5051983	17	2	Screw	M6x40
60121419	18	2	Hose guide	
5053920	19	2	Screw	MC6S M8x10
60000350	20	2	Pivot Pin	D=40, L=96 mm
60018047	21	2	Pivot Pin	D=30, L=96mm
60004177	22	4	Pivot Pin	D=30, L=80mm
60003247	23	2	Pivot Pin	D=35, L=127mm
60018046	24	2	Pivot Pin	D=30, L=127mm
5050608	25	15	Screw	MC6S M10x20 Loc
5215131	26	16	Locking cover	
60008692	27	14	Plastic cover	
60107382	28	2	Plastic cover	
5053656	29	2	Screw	M8x60
60117642	30	1	Clamp plate	
60117558	31	1	Hose clamp	Upper part
60117559	32	1	Hose clamp L3	Upper part
60129942	33	1	Hose clamp	Lower part
5011921	34	1	Nut	M6MF M8
60011125	35	2	Cover	
60021154	36	4	Plug	
60121717	37	2	Hose guide	
5002077	38	2	Screw	M6S 10x30
5002058	39	2	Screw	M6S 8x16
60120968	40	2	Edge cover	19,5 mm
60008713	41	2	Edge cover	

© 2025 Jost