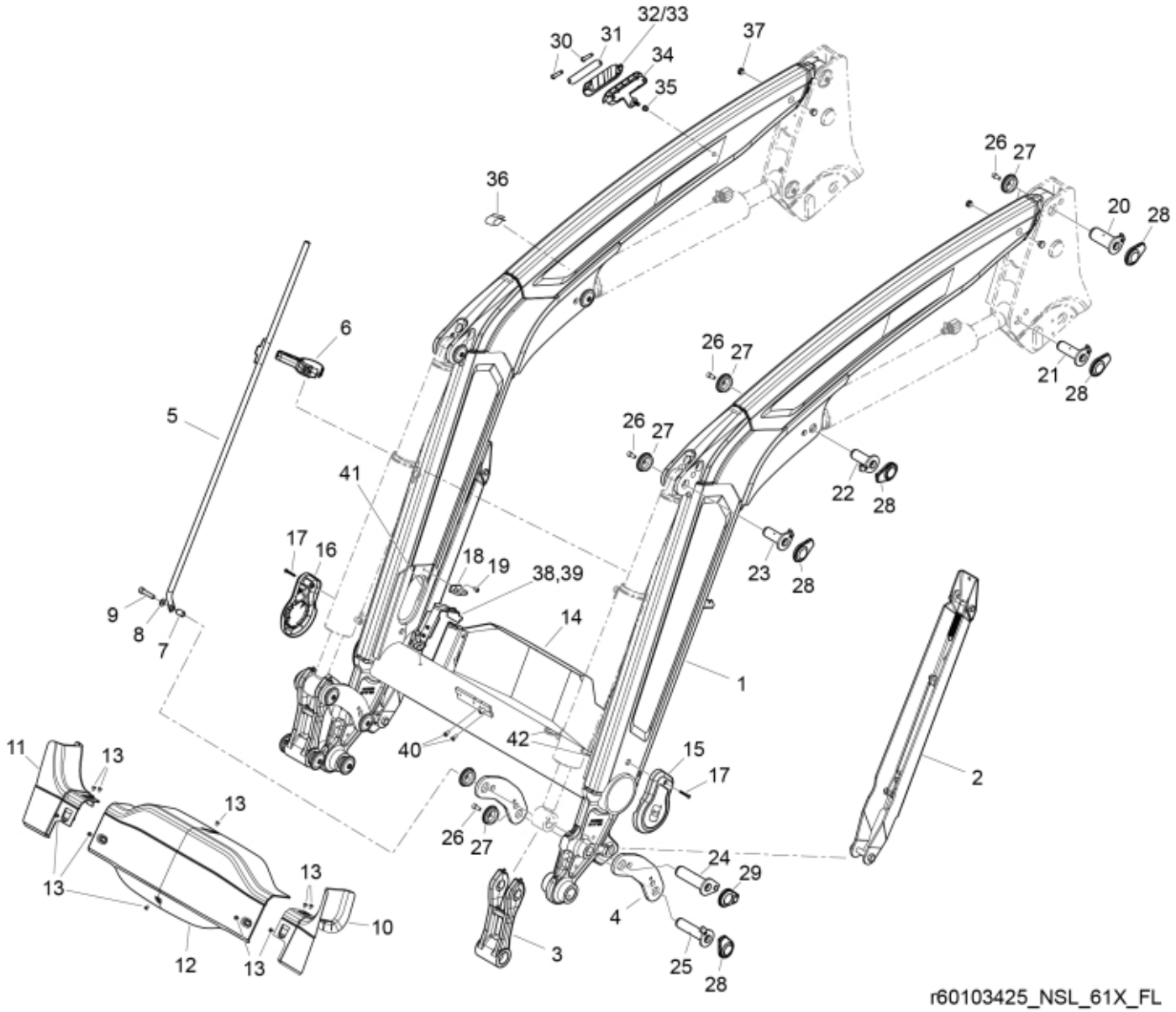
32/33
30
31
34
35
37
36
26
27
20
28
6
5
21
41
22
17
16
18
19
38,39
23
9
8
7
14
1
11
13
40
42
15
17
2
26
27
24
29
4
25
28
3
10
12
r60103425_NSL_61X_FL

© 2025 Jost

Part assemblies Loader beam

PartNo	Pos	Qty	Name	Specifications
60143346-19	1	1	Loader beam w. bushings	MF Red
4501225-19	2	2	Support leg	
60018638	3	2	Link w. bushings	Glossy Black
60052806	3*	2	Link w. bushings	Glossy Black *for loaders with Euro/SMS
60062381-19	4	4	Link	MF Red
5215216	5	1	Indicator rod	
5215208	6	1	Holder kit	
5215227	7	1	Spacer	
5013110	8	1	Washer	BRB 10.5x22x2
5050605	9	1	Screw	MC6S 10x50 Loc
60121712	10	1	Cover LH	DM
60121711	11	1	Cover RH	DM
60121260	12	1	Centre Cover	
5051982	13	10	Screw	M6x8
60122283-1	14	1	Protection plate	Glossy Black
60126090	15	1	Cover LH	
	16	1	Cover RH	
5051983	17	2	Screw	M6x40
60121419	18	2	Hose guide	
5053920	19	2	Screw	MC6S M8x10
60107537	20	2 PCS	Pivot Pin	D=45, L=96
60018058	21	2	Pivot Pin	D=35, L=96mm
60018059	22	2	Pivot Pin	D=35, L84mm
60107536	23	2	Pivot Pin	D=35, L=80
60003248	24	2	Pivot Pin	D=40, L=127
60018053	25	2	Pivot Pin	D=35, L=127mm
5050608	26	15	Screw	MC6S M10x20 Loc
5215131	27	16	Locking cover	
60008692	28	14	Plastic cover	
60107382	29	2	Plastic cover	
5053656	30	2	Screw	M8x60
60117642	31	1	Clamp plate	
60117558	32	1	Hose clamp	Upper part
60117559	33	1	Hose clamp L3	Upper part
60129942	34	1	Hose clamp	Lower part
5011921	35	1	Nut	M6MF M8
60011125	36	2	Cover	
60021154	37	4	Plug	
60121717	38	2	Hose guide	
5002077	39	2	Screw	M6S 10x30
5002058	40	2	Screw	M6S 8x16
60120968	41	2	Edge cover	19,5 mm
60008713	42	2	Edge cover	

© 2025 Jost