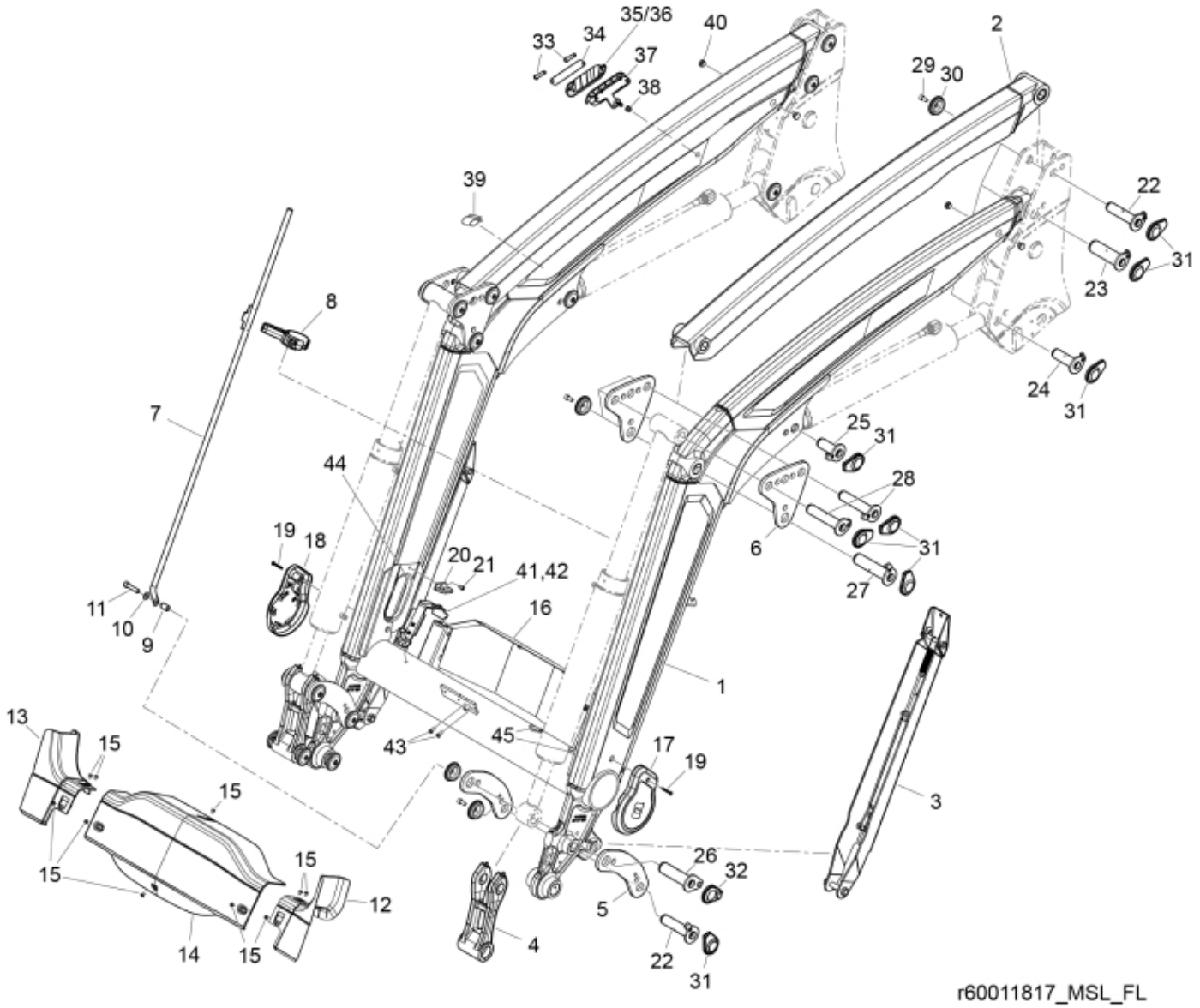
35/36
40
2
33
34
37
38
29
30
39
22
31
23
8
24
31
7
25
31
44
28
19
18
20
21
41,42
6
31
27
16
11
10
9
1
13
15
43
45
17
19
3
15
15
26
32
15
12
5
15
14
15
4
22
31
r60011817_MSL_FL


© 2025 Jost

**Part assemblies** Loader beam

| PartNo | Pos | Qty | Name | Specifications |
|---|---|---|---|---|
| 60143006-19 | 1 | 1 | Loader beam w. bushings | MF Red |
| 60103806-19 | 2 | 2 | Parallel rod w. bushings | MF Red |
| 4501225-19 | 3 | 2 | Support leg | |
| 60018638 | 4 | 2 | Link w. bushings | Glossy Black |
| 60052806 | 4* | 2 | Link w. bushings | Glossy Black *for loaders with Euro/SMS |
| 60062381-19 | 5 | 4 | Link | MF Red |
| 60004126-19 | 6 | 4 | Knee link | MF Red |
| 5215217 | 7 | 1 | Indicator rod | |
| 5215208 | 8 | 1 | Holder kit | |
| 5215227 | 9 | 1 | Spacer | |
| 5013110 | 10 | 1 | Washer | BRB 10.5x22x2 |
| 5050605 | 11 | 1 | Screw | MC6S 10x50 Loc |
| 60121712 | 12 | 1 | Cover LH | DM |
| 60121711 | 13 | 1 | Cover RH | DM |
| 60121260 | 14 | 1 | Centre Cover | |
| 5051982 | 15 | 10 | Screw | M6x8 |
| 60122283-1 | 16 | 1 | Protection plate | Glossy Black |
| 60126090 | 17 | 1 | Cover LH | |
| 60126089 | 18 | 1 | Cover RH | |
| 5051983 | 19 | 2 | Screw | M6x40 |
| 60121419 | 20 | 2 | Hose guide | |
| 5053920 | 21 | 2 | Screw | MC6S M8x10 |
| 60018053 | 22 | 4 | Pivot Pin | D=35, L=127mm |
| 60004503 | 23 | 2 | Pivot Pin | D=45, L=129mm |
| 60018058 | 24 | 2 | Pivot Pin | D=35, L=96mm |
| 60018059 | 25 | 2 | Pivot Pin | D=35, L84mm |
| 60003248 | 26 | 2 | Pivot Pin | D=40, L=127 |
| 60019828 | 27 | 2 | Pivot Pin | D=40, L=147mm |
| 60000355 | 28 | 4 | Pivot Pin | D=35, L=147mm |
| 5050608 | 29 | 21 | Screw | MC6S M10x20 Loc |
| 5215131 | 30 | 22 | Locking cover | |
| 60008692 | 31 | 20 | Plastic cover | |
| 60107382 | 32 | 2 | Plastic cover | |
| 5053656 | 33 | 2 | Screw | M8x60 |
| 60117642 | 34 | 1 | Clamp plate | |
| 60117558 | 35 | 1 | Hose clamp | Upper part |
| 60117559 | 36 | 1 | Hose clamp L3 | Upper part |
| 60129942 | 37 | 1 | Hose clamp | Lower part |
| 5011921 | 38 | 1 | Nut | M6MF M8 |
| 60011125 | 39 | 2 | Cover | |
| 60021154 | 40 | 4 | Plug | |
| 60121717 | 41 | 2 | Hose guide | |
| 5002077 | 42 | 2 | Screw | M6S 10x30 |
| 5002058 | 43 | 2 | Screw | M6S 8x16 |
| 60120968 | 44 | 2 | Edge cover | 19,5 mm |
| 60008713 | 45 | 2 | Edge cover | |


© 2025 Jost