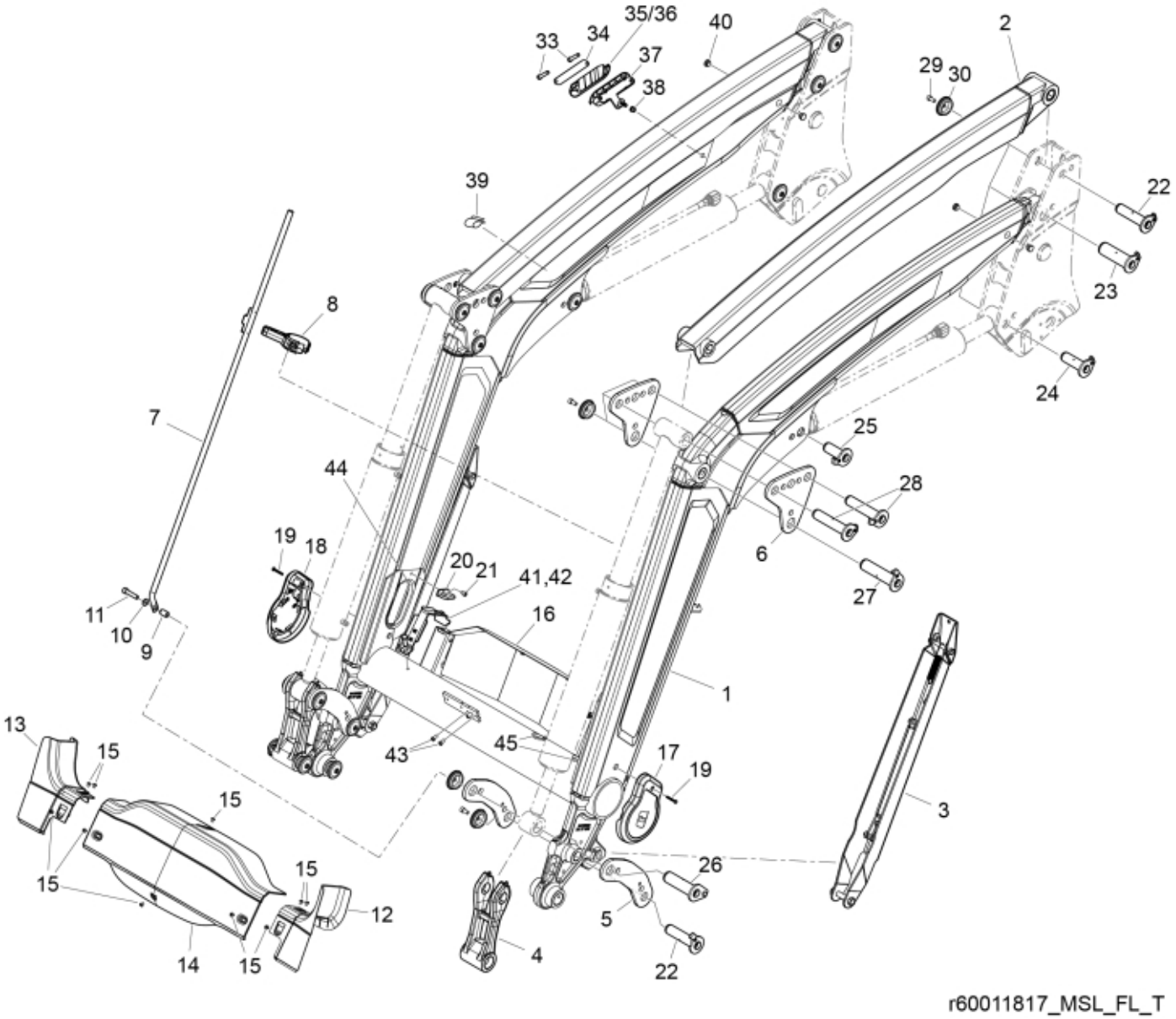
35/36
40
33
34
37
38
2
29
30
39
22
23
8
24
7
25
44
28
19
18
20
21
41,42
6
27
11
10
9
16
1
13
15
43
45
17
19
3
15
15
26
15
12
5
14
15
4
22
r60011817_MSL_FL_T

© 2025 Jost

Part assemblies Loader beam

PartNo	Pos	Qty	Name	Specifications
60143003-1	1	1	Loader beam w. bushings	Glossy Black
60103803-1	2	2	Parallel rod w. bushings	Glossy Black
60045910-1	3	2 PCS	Support leg	Glossy Black. Replaces 60105482-1
60018637	4	2	Link w. bushings	Glossy Black
60052804	4*	2	Link w. bushings	Glossy Black *for loaders with Euro/SMS
60062380-1	5	4	Link	Glossy Black
60103620-1	6	4	Knee link	Glossy Black
5215216	7	1	Indicator rod	
5215208	8	1	Holder kit	
5215227	9	1	Spacer	
5013110	10	1	Washer	BRB 10.5x22x2
5050605	11	1	Screw	MC6S 10x50 Loc
60121712	12	1	Cover LH	DM
60121711	13	1	Cover RH	DM
60121260	14	1	Centre Cover	
5051982	15	10	Screw	M6x8
60122283-1	16	1	Protection plate	Glossy Black
60126088	17	1	Cover LH	
60126087	18	1	Cover RH	
5051983	19	2	Screw	M6x40
60121419	20	2	Hose guide	
5053920	21	2	Screw	MC6S M8x10
60018046	22	4	Pivot Pin	D=30, L=127mm
60018062	23	2	Pivot Pin	D=40, L=127mm
60018047	24	2	Pivot Pin	D=30, L=96mm
60004177	25	2	Pivot Pin	D=30, L=80mm
60003247	26	2	Pivot Pin	D=35, L=127mm
60000355	27	2	Pivot Pin	D=35, L=147mm
60033598	28	4	Pivot Pin	D=30, L=147mm
5050608	29	21	Screw	MC6S M10x20 Loc
5215131	30	22	Locking cover	
5053656	33	2	Screw	M8x60
60117642	34	1	Clamp plate	
60117558	35	1	Hose clamp	Upper part
60117559	36	1	Hose clamp L3	Upper part
60129942	37	1	Hose clamp	Lower part
5011921	38	1	Nut	M6MF M8
60011125	39	2	Cover	
60021154	40	4	Plug	
60121717	41	2	Hose guide	
5002077	42	2	Screw	M6S 10x30
5002058	43	2	Screw	M6S 8x16
60120968	44	2	Edge cover	19,5 mm
60008713	45	2	Edge cover	

© 2025 Jost