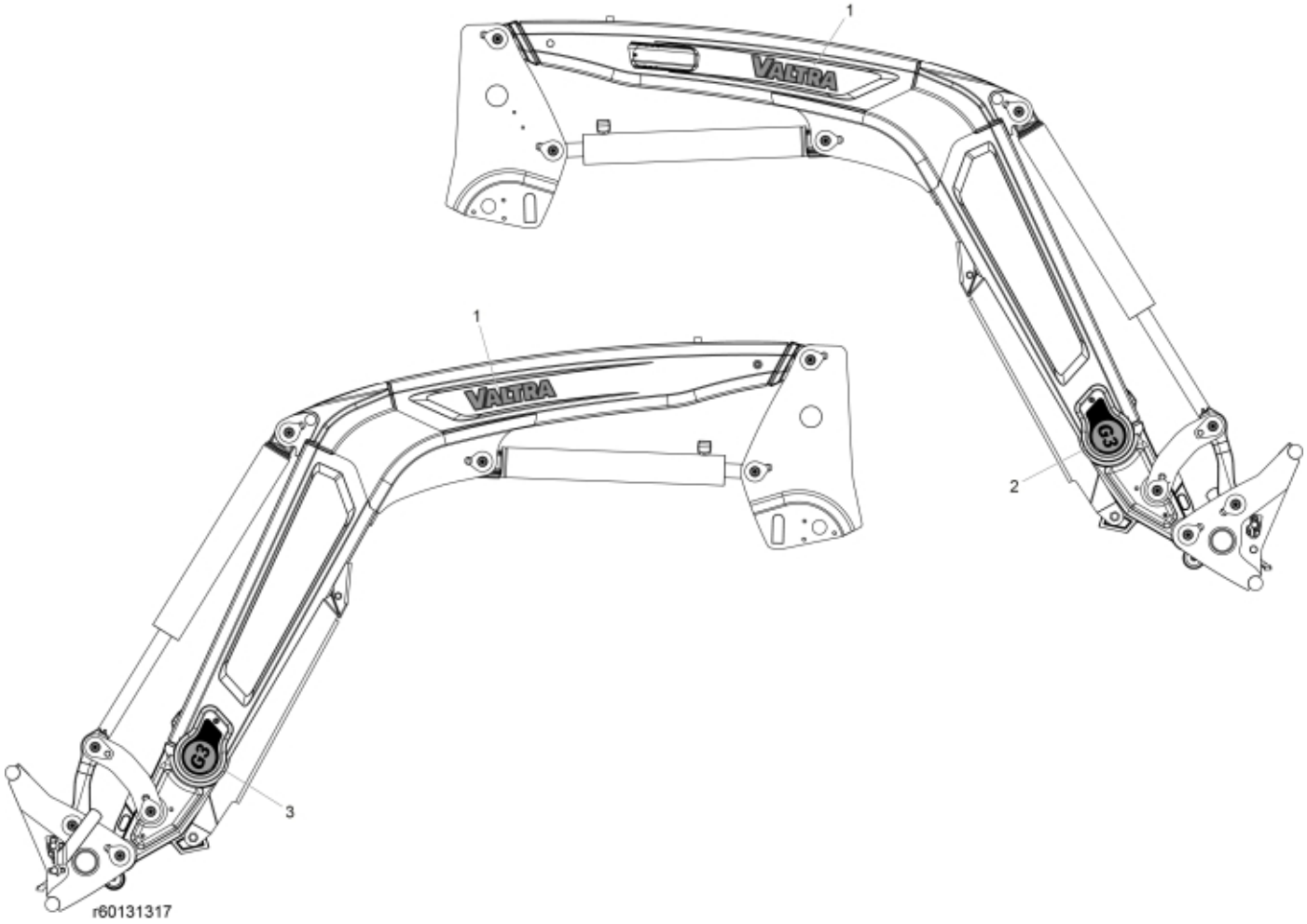

© 2025 Jost

Description	G3
Part assemblies	Decals
Specification	Year From: 5/1/2026 12:00:00 AM

PartNo	Pos	Qty	Name	Specifications
60108055	1	2 PCS	Decal, Brand	Valtra
60130855	2	1	Decal Model, RH	G3
60130854	3	1	Decal Model, LH	G3

© 2025 Jost