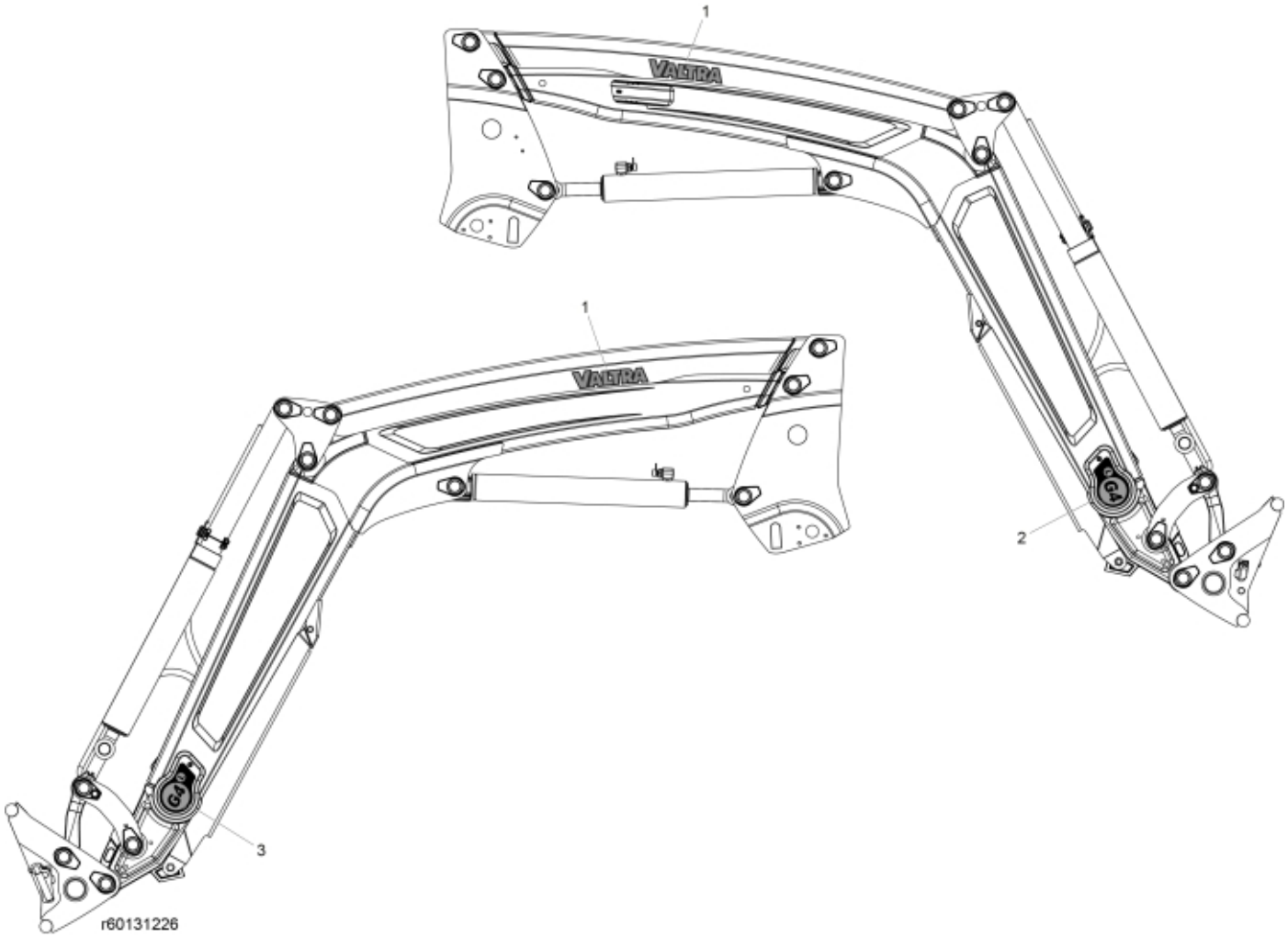

© 2025 Jost

Description	G4L
Part assemblies	Decals
Specification	Year From: 5/1/2026 12:00:00 AM

PartNo	Pos	Qty	Name	Specifications
60108055	1	2 PCS	Decal, Brand	Valtra
60130867	2	1	Decal Model, RH	G4L
60130866	3	1	Decal Model, LH	G4L

© 2025 Jost