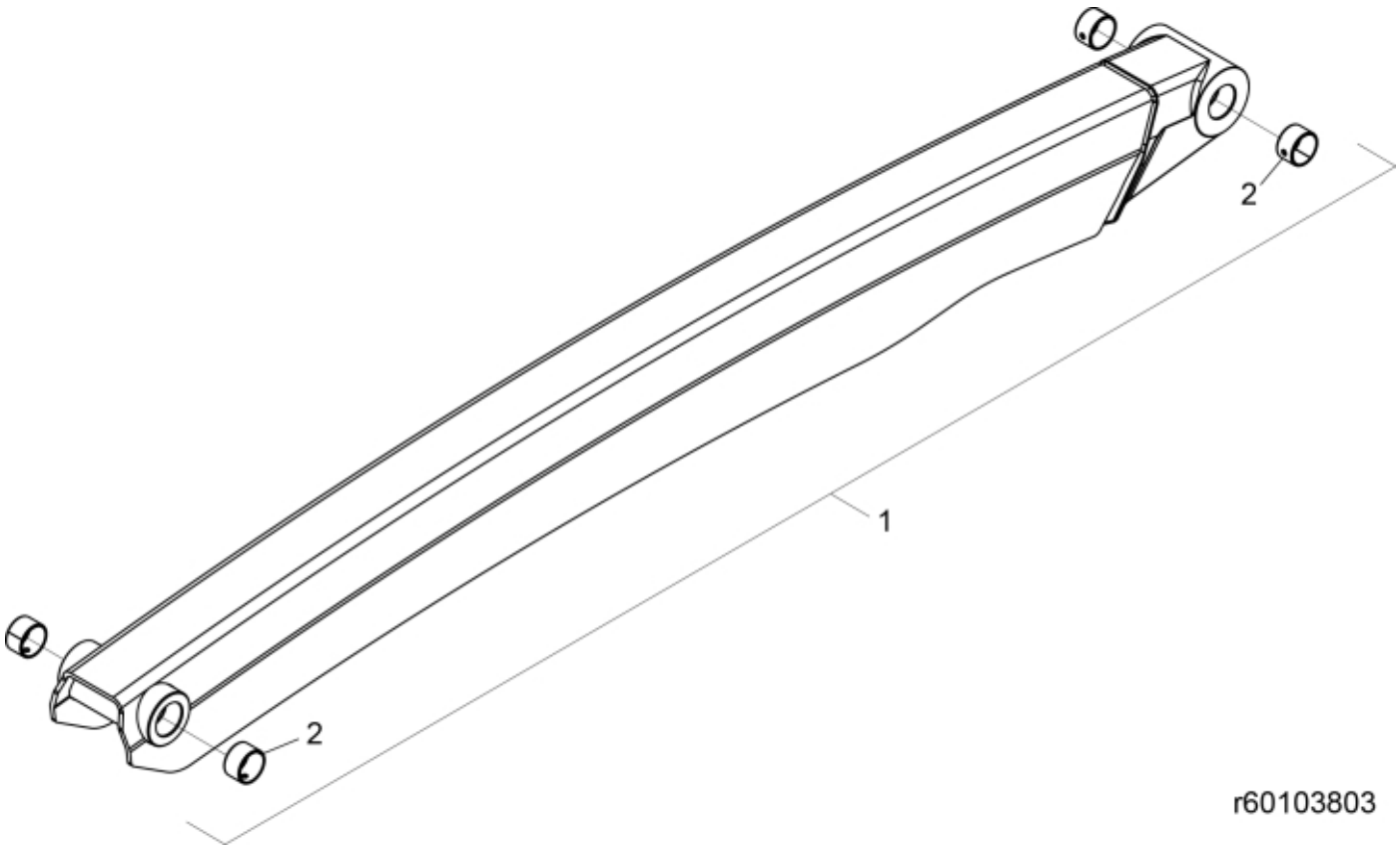



© 2025 Jost

| | |
|---|---|
| **Part assemblies** | Parallel rod w. bushings |
| **Specification** | Specification: Dynamic Blue |

| PartNo | Pos | Qty | Name | Specifications |
|---|---|---|---|---|
| 60103803-75 | 1 | 1 | Parallel rod w. bushings | Dynamic Blue |
| 5018515 | 2 | 4 | • Bushing | D30 L=20 |


© 2025 Jost