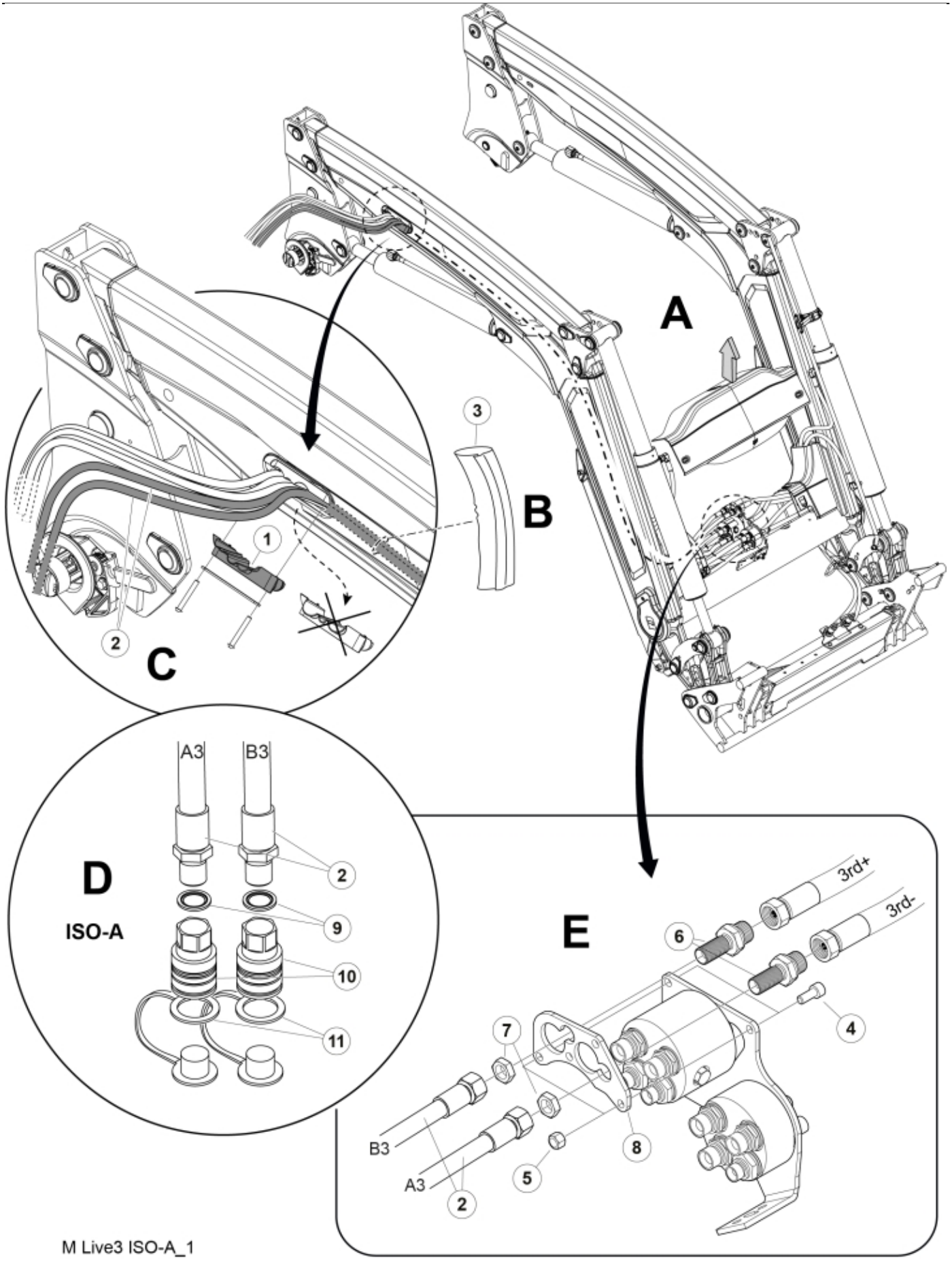

M Live3 ISO-A_1

© 2025 Jost

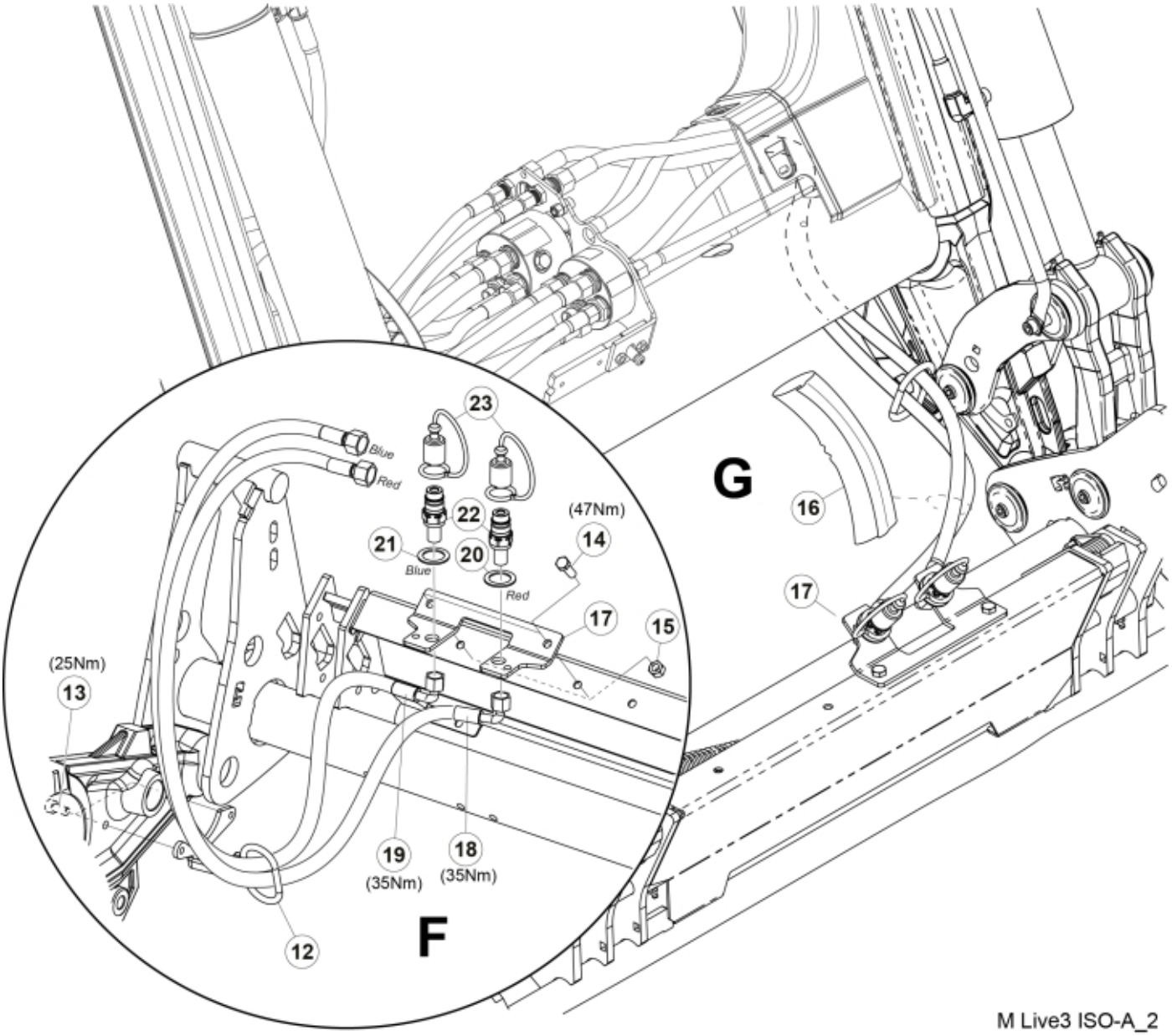
23
Blue
Red
22
(47Nm)
14
21
Blue
20
Red
17
15
(25Nm)
13
19
(35Nm)
18
(35Nm)
12
F
G
16
17
M Live3 ISO-A_2

© 2025 Jost

Description	DM
Part assemblies	Live3 cpl, ISO-A
Specification	Year From: 5/1/2026 12:00:00 AM

PartNo	Pos	Qty	Name	Specifications
60117559	1	1	Hose clamp L3	Upper part
60126063	2	2	Hose	3/8" L=4235 1/2GRU - 3/8GRLM
5034121	3	1	Protection sleeve	
5004061	4	2	Screw	MC6S M8x20
5011553	5	2	Nut	M6M M8 Loc-king
60104392	6	2	Adaptor	G1/2" - G3/8"
60020329	7	2	Nut	3/8"
60037972	8	1	Bracket	
5013853	9	2	Dowty washer	Tredo 1/2", Part is included in kit 60007907 Hose cpl., 9032177 Hose cpl.
5044127	10	2	Quick Coupling	1/2", Part is included in kit 60007907 Hose cpl., 9032177 Hose cpl.
5044130	11	2	Dust Cover	Part is included in kit 60007907 Hose cpl., 9032177 Hose cpl.
60032284	12	1	Hose guide	
5051492	13	2 PCS	Screw	MC6S M10X30 (8.8)
5002077	14	2	Screw	M6S 10x30
5011554	15	2	Nut	Loc-King M10
60019369	16	1	Hose cover	
60018857	17	1	Bracket	
60014066	18	1	Hose	3/8" L=1260 1/2GRLMA - 3/8G90LMA
60014451	19	1	Hose	3/8" L=1170 1/2GRLMA - 3/8G90LMA
5022157	20	1	Washer, red	
5022159	21	1	Washer, blue	
5044940	22	2	Coupling	ISO-A 1/2" Male - G3/8
5044129	23	2	Dust Cover	1/2" Male

© 2025 Jost