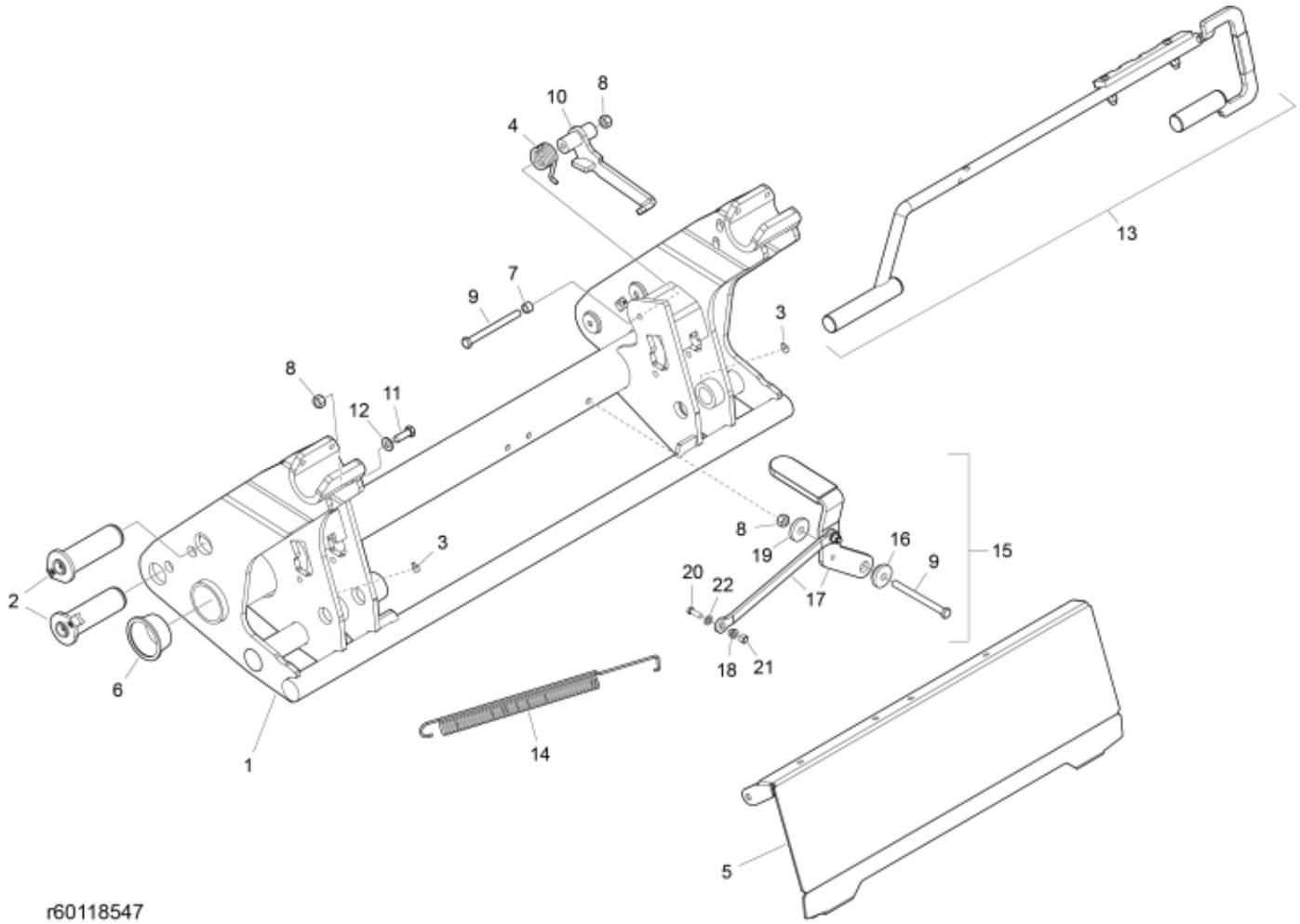

© 2025 Jost

Description	Tool carrier
Part assemblies	MX

PartNo	Pos	Qty	Name	Specifications
60118548-7	1	1	Tool carrier	Quicke Grey
60018062	2	4	Pivot Pin	D=40, L=127mm
5023005	3	2	Greaser	M 10 x 1
5051511	4	1	Spring	
60119344-7	5	1	Protection plate	Quicke Grey
5221573	6	2	Plastic cover	
5219100	7	1	Spacer	
5011554	8	3	Nut	Loc-King M10
5002091	9	2	Screw	M6S 10x120
60119078	10	1	Click-on	
5002077	11	1	Screw	M6S 10x30
5013110	12	1	Washer	BRB 10.5x22x2
60119563	13	1	Locking mechanism	
60010817	14	1	Spring	
60119508	15	1	Locking mechanism cpl.	
60009557	16	1	Sleeve	
60119507	17	1	Lever	
60038758	18	1	Spacer	
60009693	19	1	Plate	
5002055	20	1	Screw	M6S M8x40
5011553	21	1	Nut	M6M M8 Loc-king
5013101	22	1	Washer	BRB 8,4 x 16

© 2025 Jost