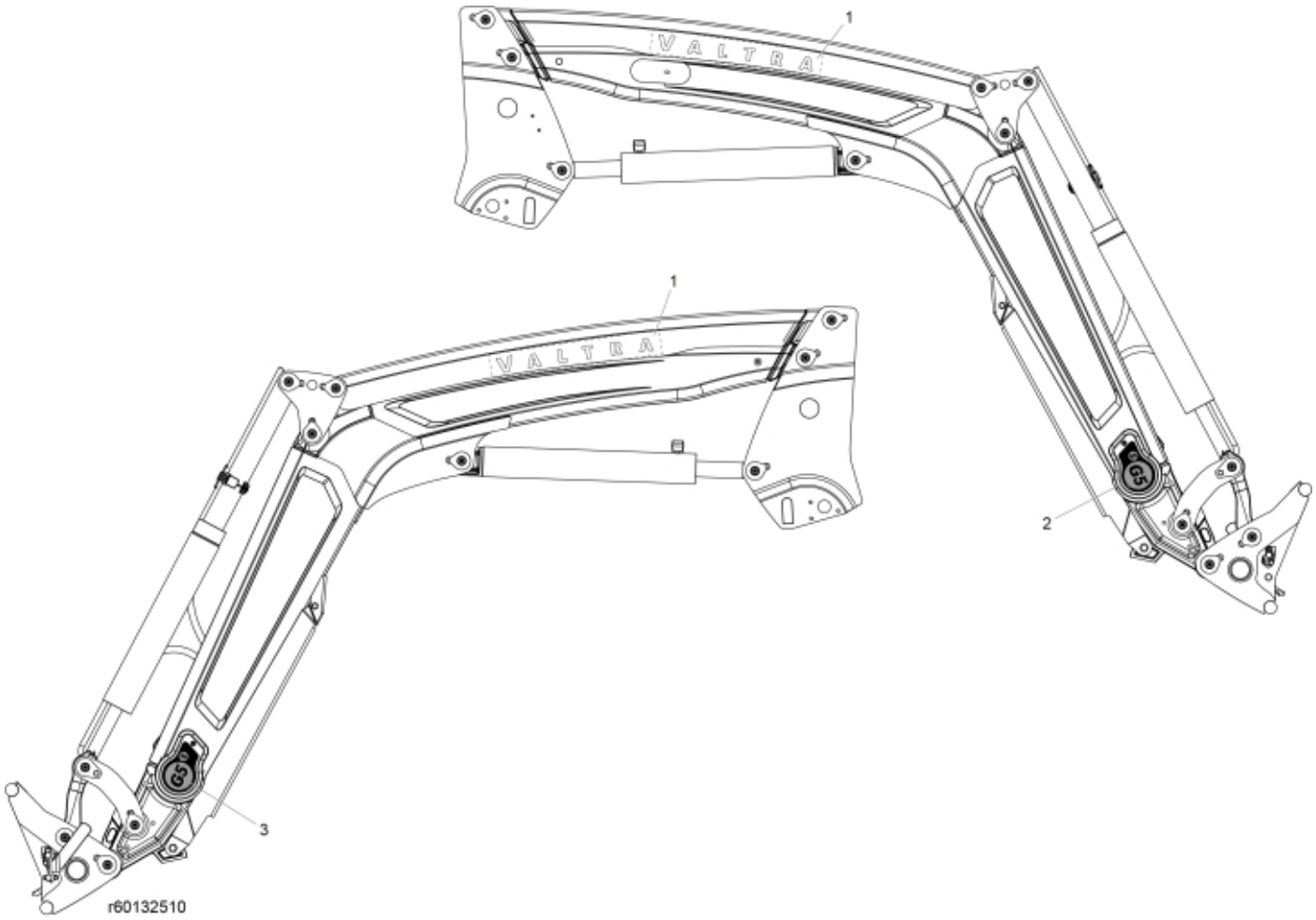

© 2025 Jost

Description	G5S (S326V)
Part assemblies	Decals
Specification	Year From: 5/1/2026 12:00:00 AM

PartNo	Pos	Qty	Name	Specifications
60132597	1	2	Decal, Brand	VALTRA 3D (S)
60129372	2	1	Decal Model, RH	G5S
60129360	3	1	Decal Model, LH	G5S

© 2025 Jost