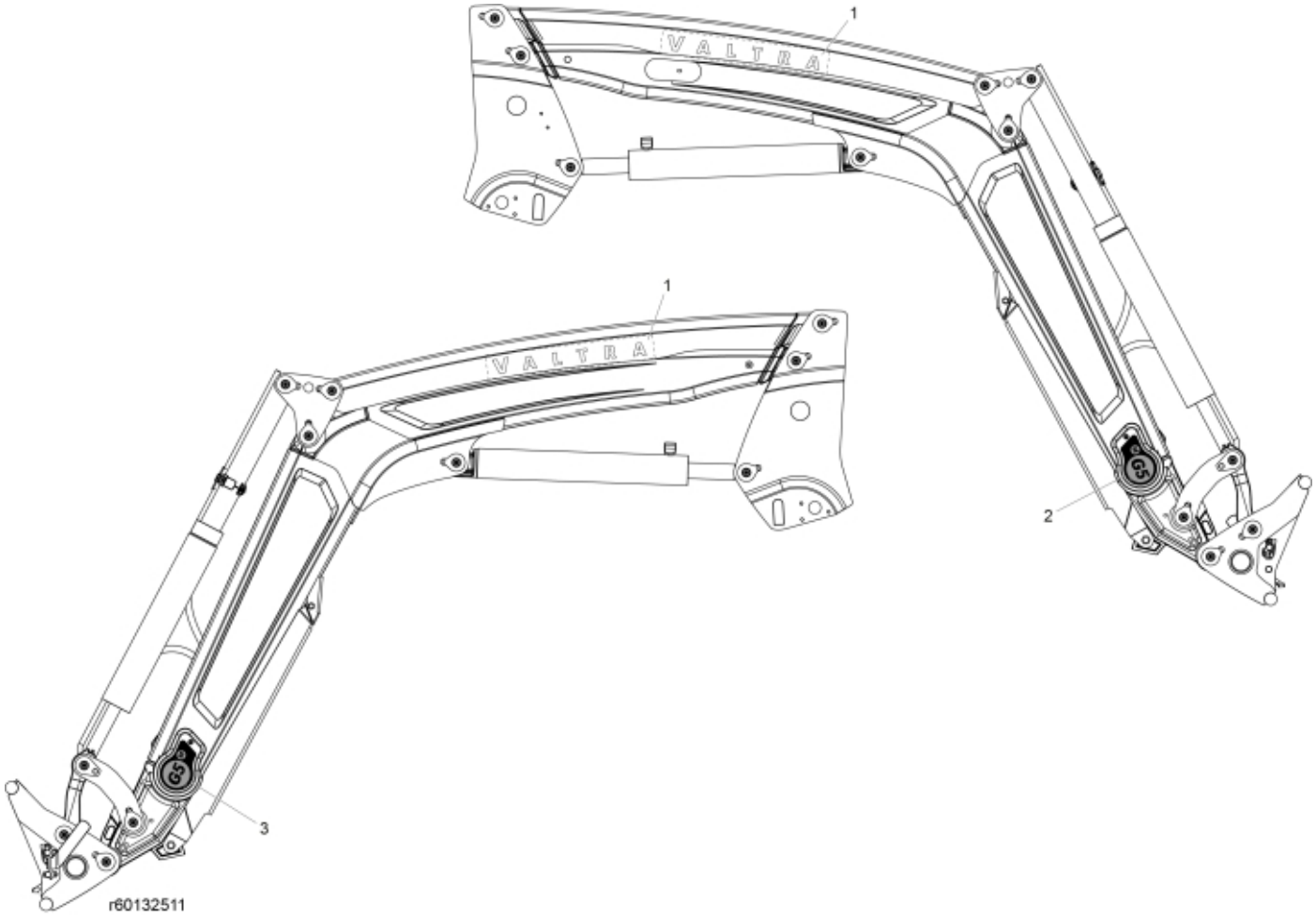

© 2025 Jost

Description	G5M (S326V)
Part assemblies	Decals
Specification	Year From: 5/1/2026 12:00:00 AM

PartNo	Pos	Qty	Name	Specifications
60132597	1	2	Decal, Brand	VALTRA 3D (S)
60130871	2	1	Decal Model, RH	G5M
60130870	3	1	Decal Model, LH	G5M

© 2025 Jost