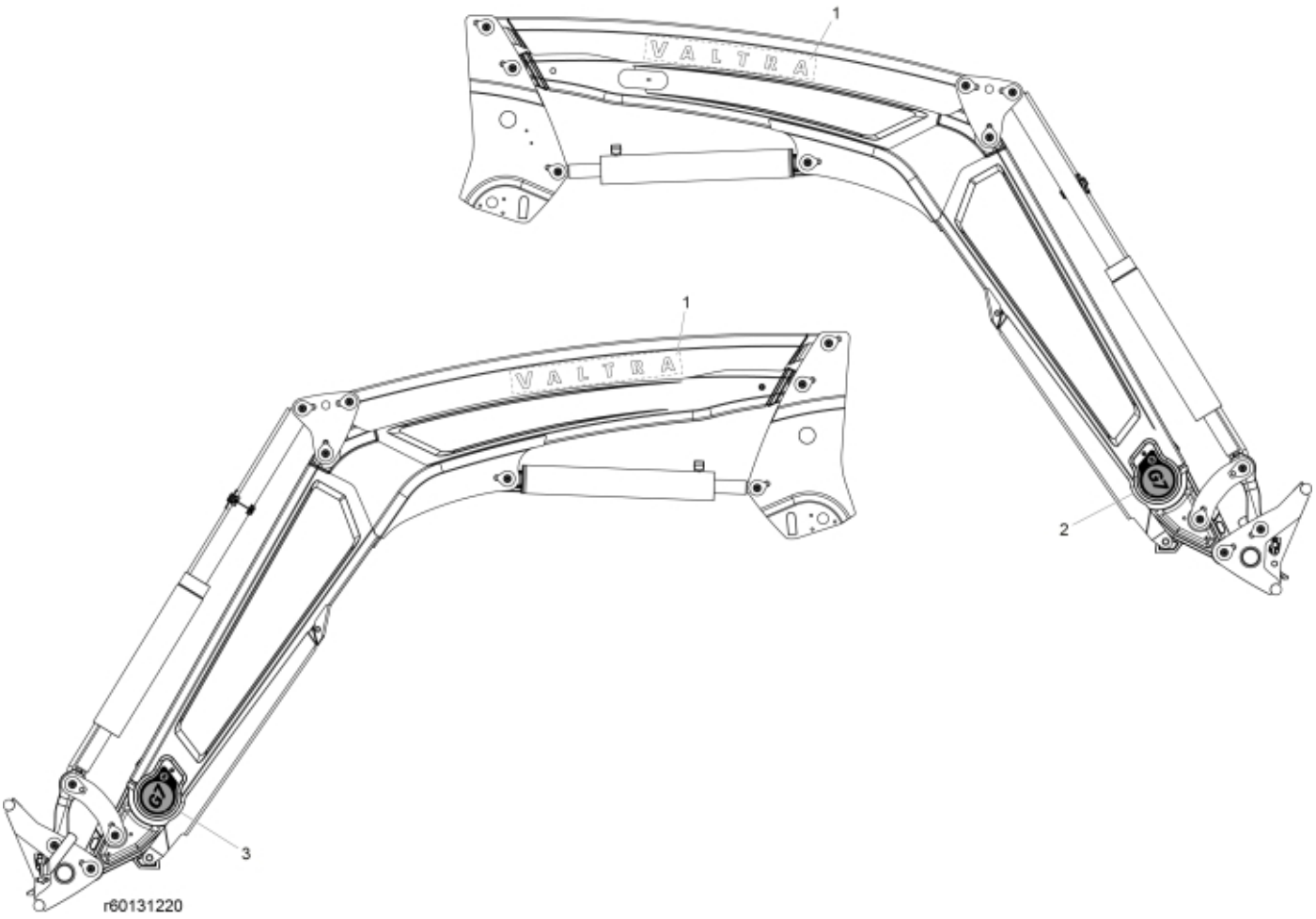

© 2025 Jost

Description	G7M (M124V)
Part assemblies	Decals
Specification	Year From: 5/1/2026 12:00:00 AM

PartNo	Pos	Qty	Name	Specifications
60132600	1	2	Decal, Brand	VALTRA 3D (L)
60130885	2	1	Decal Model, RH	G7M
60130884	3	1	Decal Model, LH	G7M

© 2025 Jost