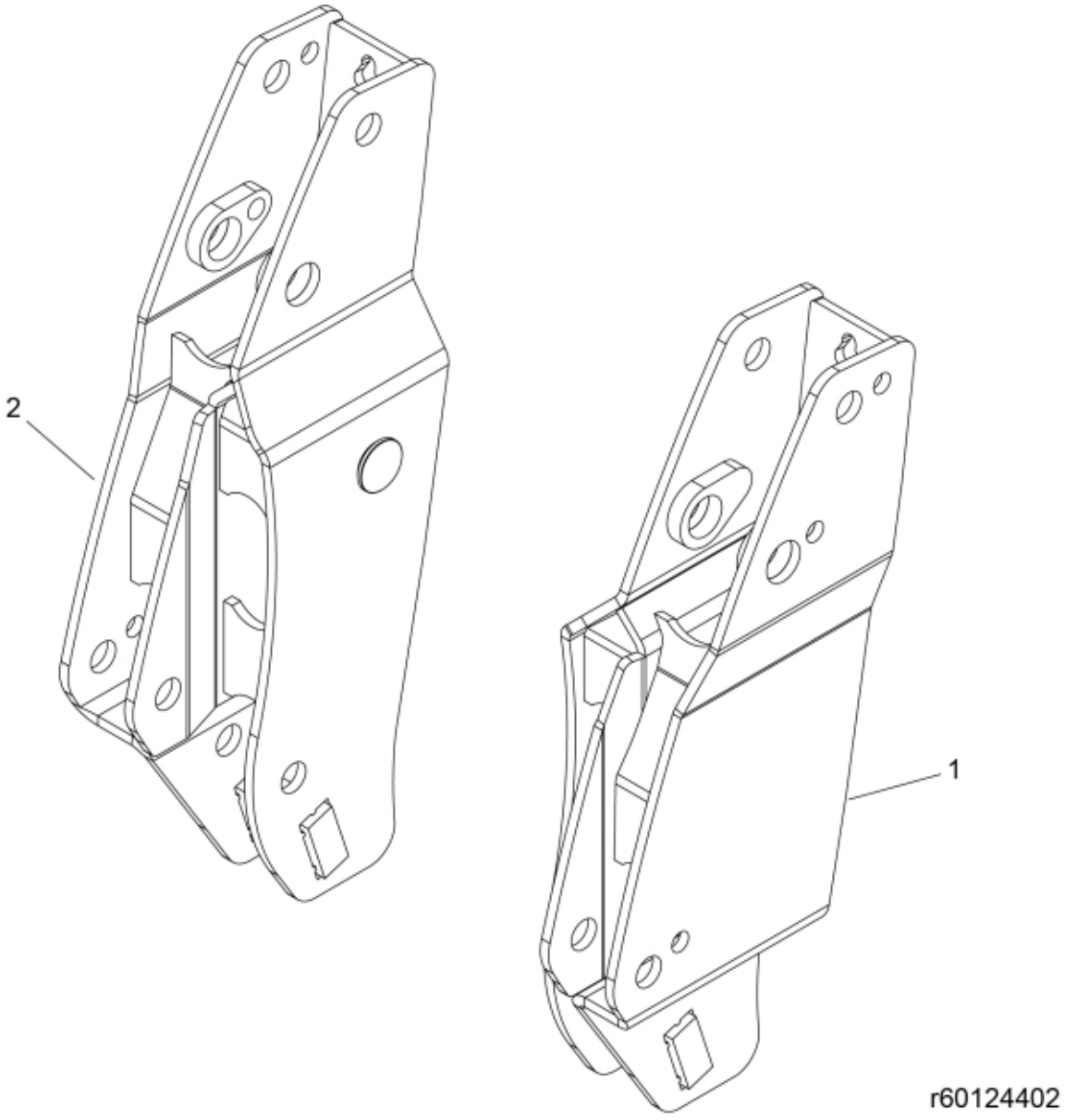

© 2025 Jost

Description	MSL
Part assemblies	Bearing box US

PartNo	Pos	Qty	Name	Specifications
60117996-19	1	1	Bearing box LH	MF Red
60119539-19	2	1	Bearing box RH	MF Red

© 2025 Jost