r59010751

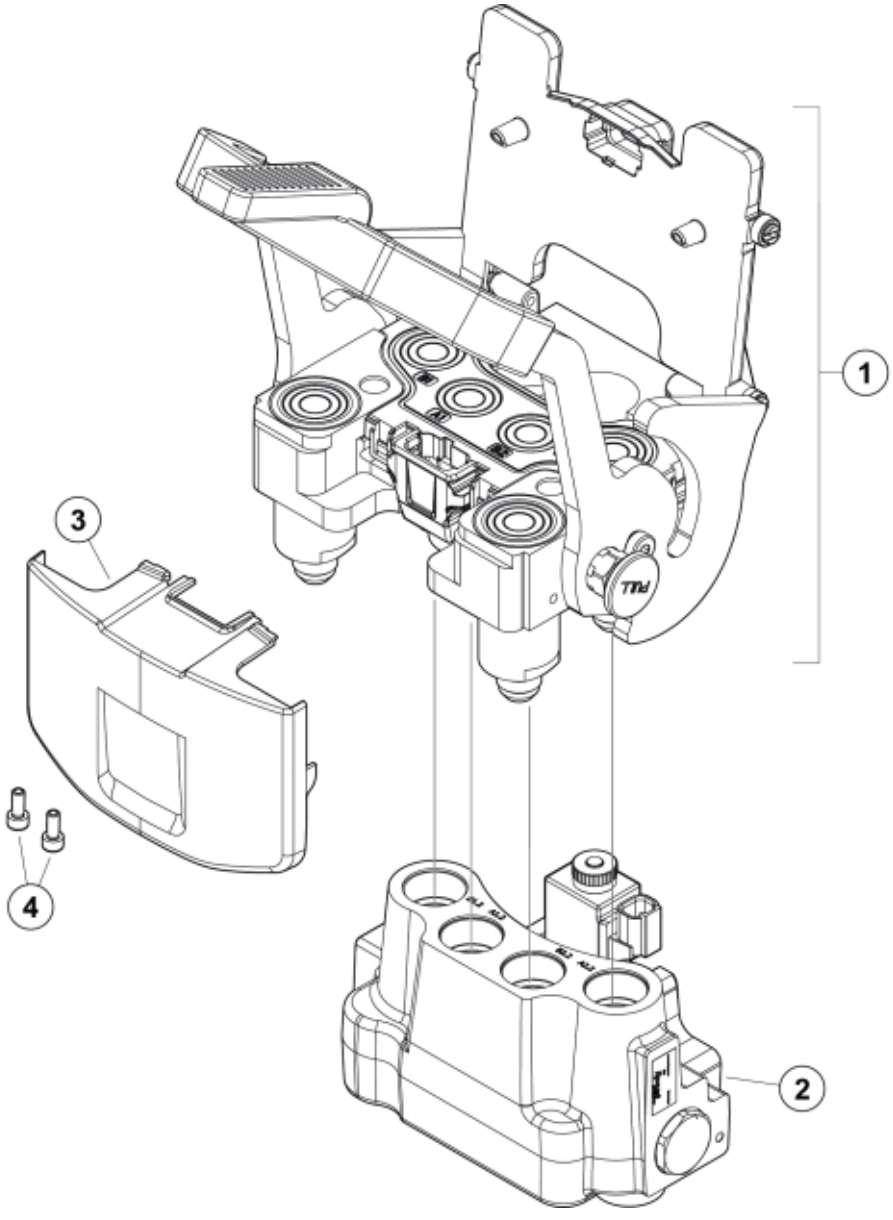

© 2025 Jost

Part assemblies	Diverter valve cpl.
Specification	Specification: QC6

PartNo	Pos	Qty	Name	Specifications
59020660	1	1	Multi coupling base, QC6c	QC6c
59011702	2	1	Diverter valve 12/2 El	
59000024	3	1	Cover	
59030602	4	2	Screw	M5x10

© 2025 Jost