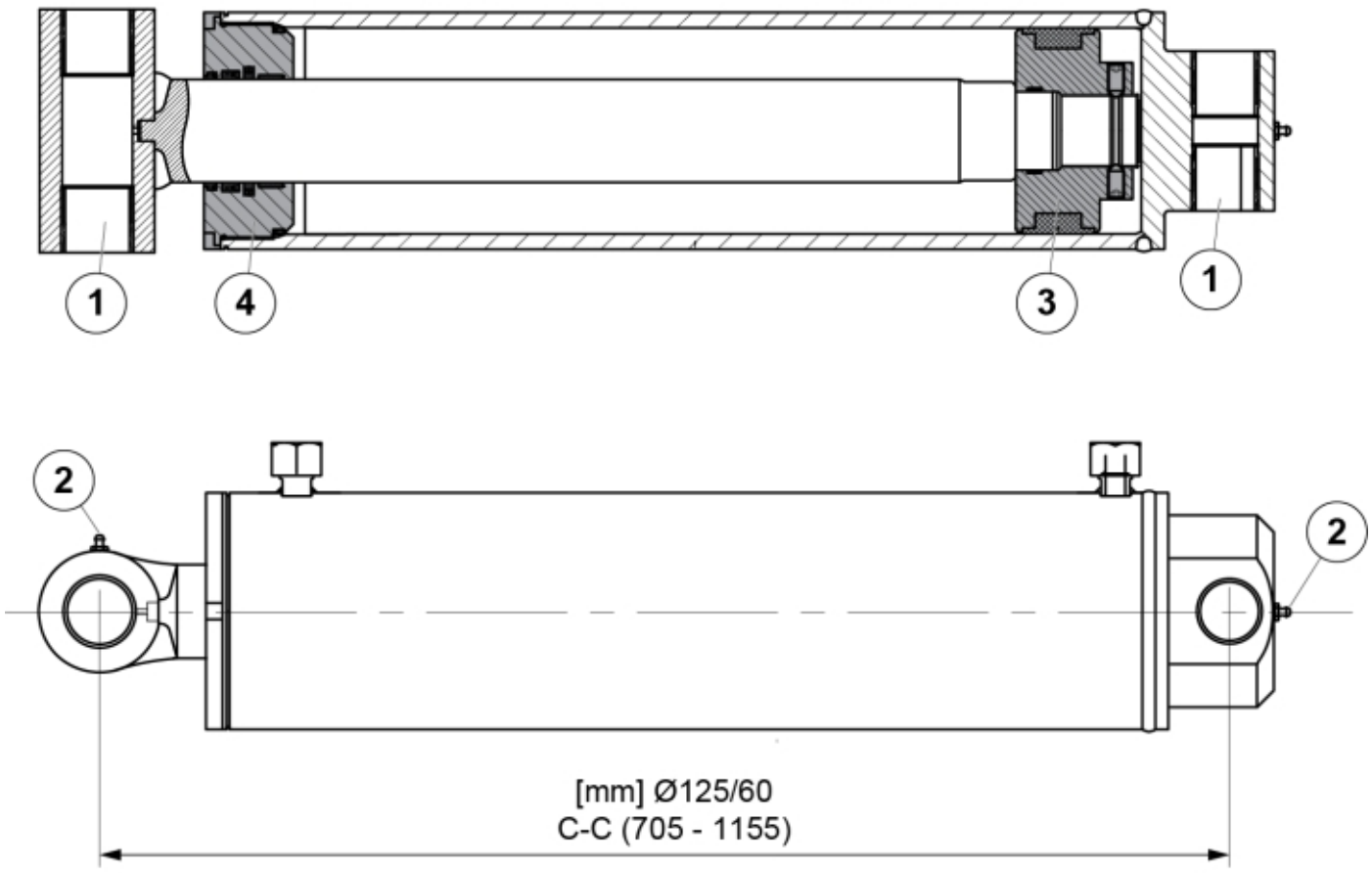

r60136169

© 2025 Jost

Description	125/60
Part assemblies	Cylinder

PartNo	Pos	Qty	Name	Specifications
5051196	1	4	Bushing	
5021901	2	2	Grease fitting	M6
11257186	3	1	Piston cpl.	
11257190	4	1	Bearing	
11257176	5	2	Seal kit	

© 2025 Jost