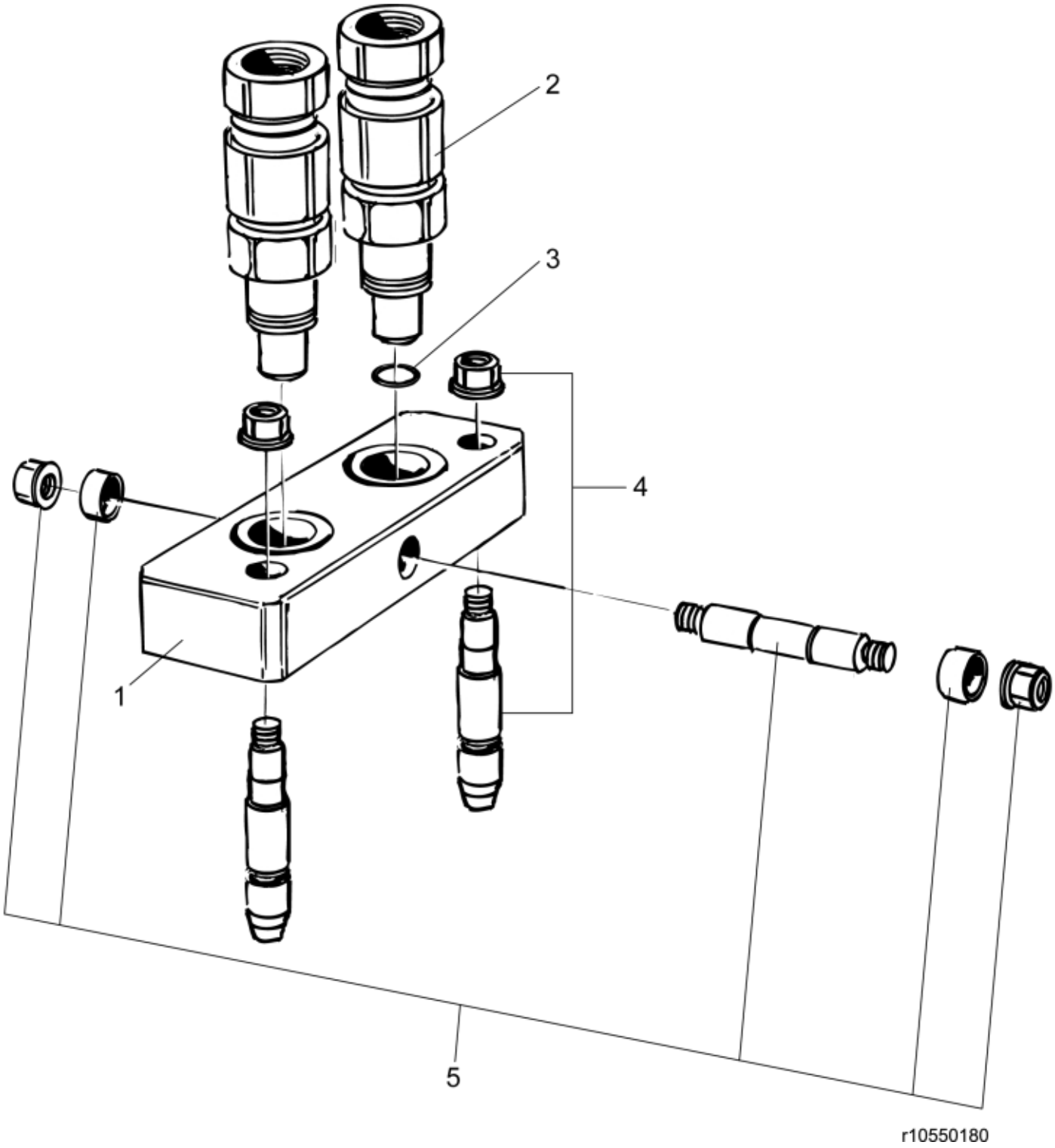

© 2025 Jost

Part assemblies	Selecto Fix, Upper part
Specification	Year From: 1/1/2002 12:00:00 AM

PartNo	Pos	Qty	Name	Specifications
10550204	1	1	Housing	
10550201	2	2	Coupling	
5045407	3	1	Seal kit	Supplied in bags of 10 pcs
10301554	4	1	Dowel kit	Kit, 2 pcs
10550205	5	1	Shaft	

© 2025 Jost