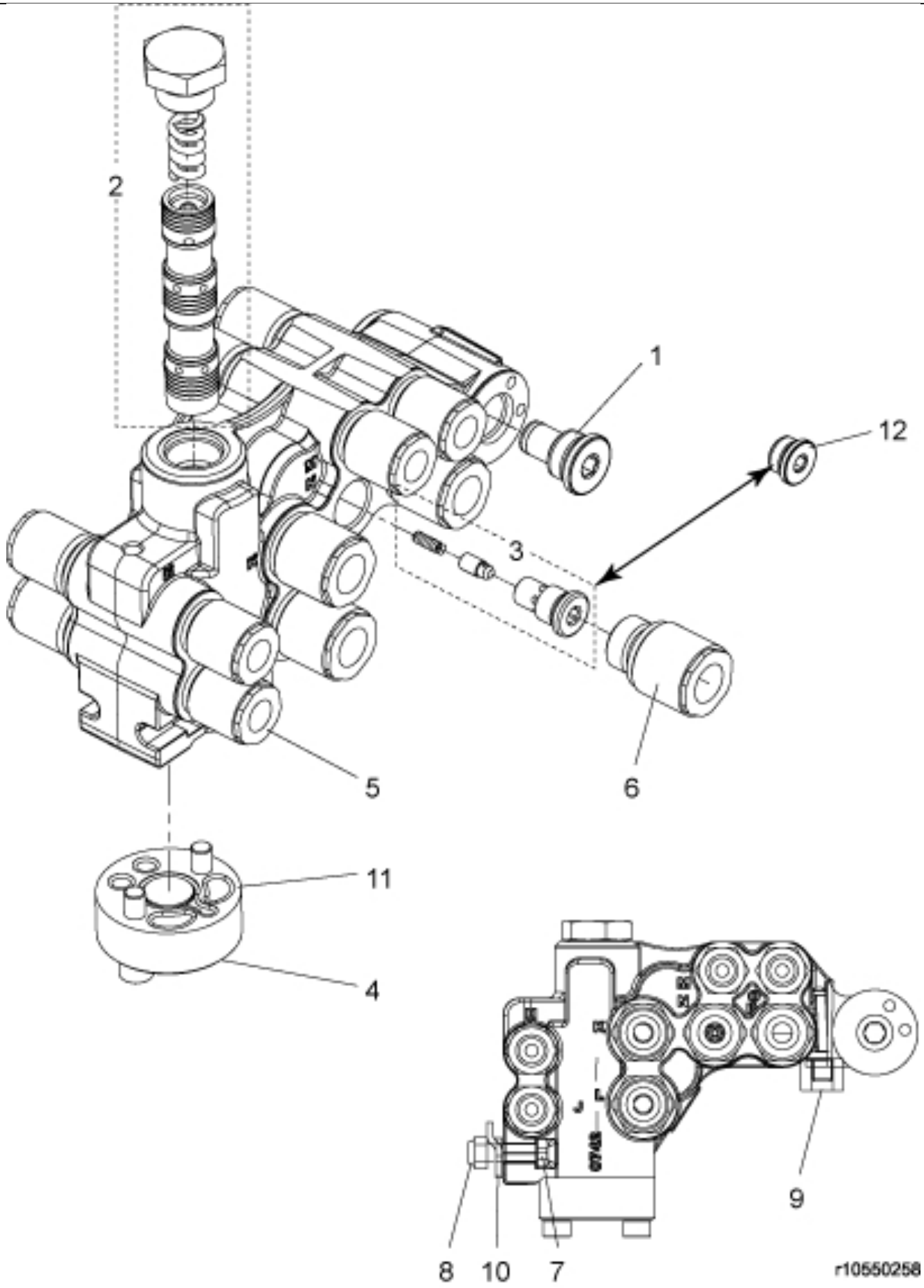

© 2025 Jost

Part assemblies	Compact valve
Specification	Serial number to: 7332743

PartNo	Pos	Qty	Name	Specifications
10550262	1	1	Plug	
10550321	2	1	Spool kit	
10550322	3	1	Restrictor valve	
10550331	4	1	Cover plate	
9031324	5	8	Coupling	3/8"
9031325	6	4	Coupling	1/2"
5002053	7	2	Screw	M6S 8 x 30
5011553	8	2	Nut	M6M M8 Loc-king
5215150	9	1	Support	
5215151	10	1	Support	
5040040	11	1	Seal kit	
11120606	12	1	Plug	

© 2025 Jost