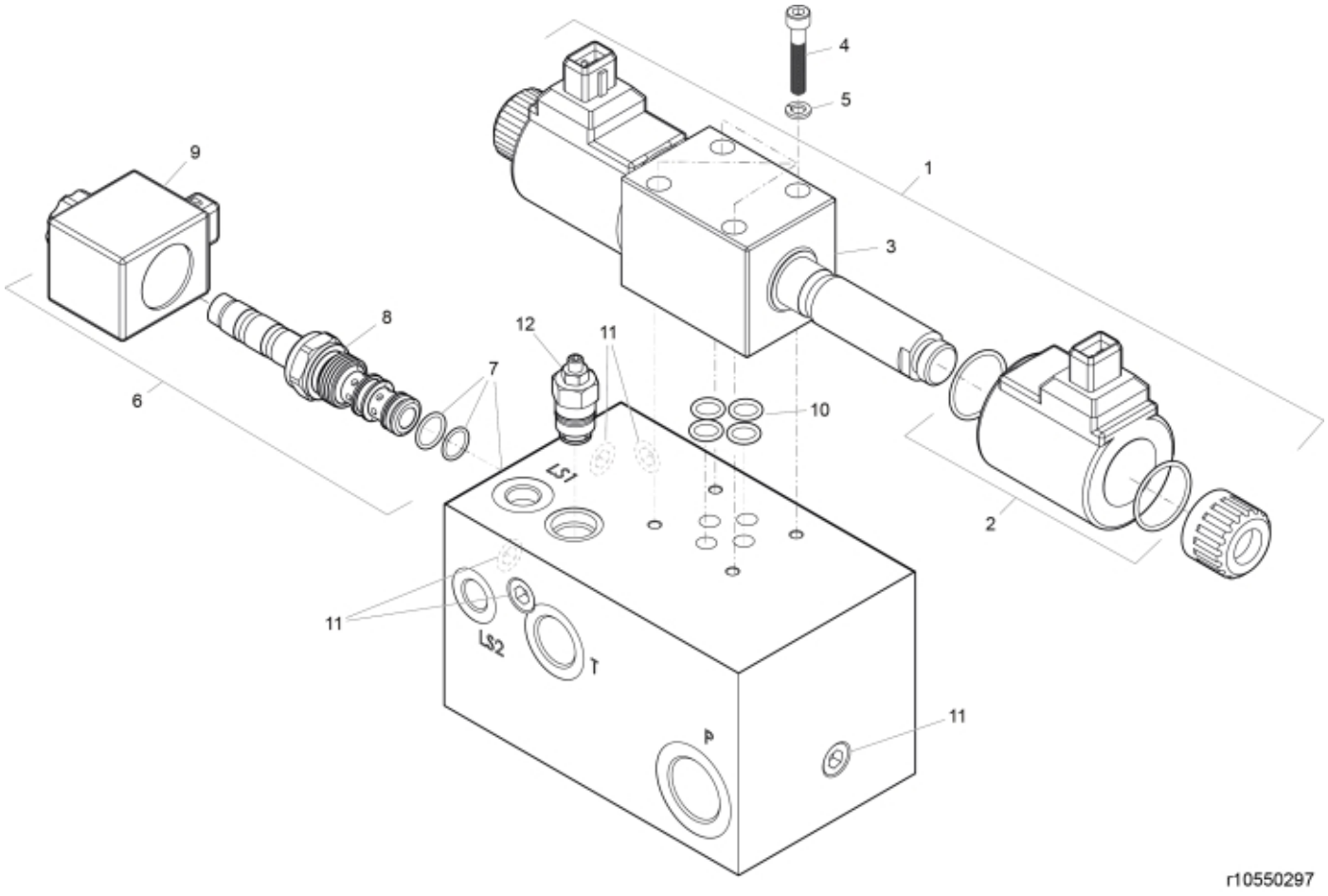

© 2025 Jost

Part assemblies Diverter valve

PartNo	Pos	Qty	Name	Specifications
10550344	1	1	Diverter valve cpl.	
10550387	2	2	• Solenoid	
10550388	3	2	• Diverter valve	
5004930	4	4	• Screw	MC6S 5x30
5013918	5	4	• Washer	
10550347	6	1	Valve	
10550389	7	1	• Seal kit	
10550392	8	1	• Cartridge valve	
10550393	9	1	• Solenoid cpl.	Replaces 10550391
5039027	10	1	Seal kit	
4500870	11	5 PCS	Plug	
60044212	12	1 PCS	Pressure relief valve	

© 2025 Jost