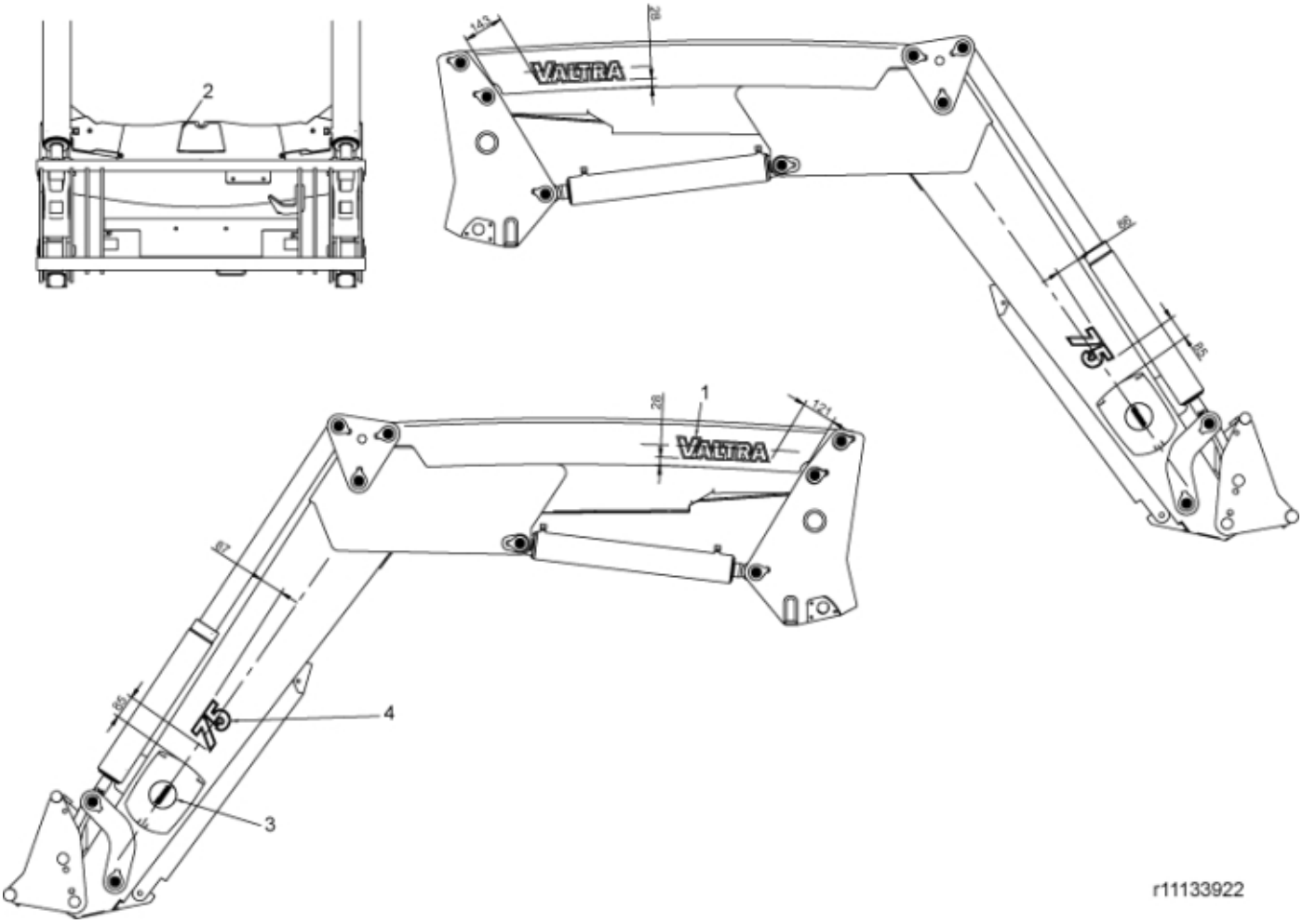

© 2025 Jost

Part assemblies Decal kit Valtra 75

PartNo	Pos	Qty	Name	Specifications
11133937	1	2	Decal, Brand	
11133936	2	1 PCS	Trapezoid decal	
11133935	3	2 PCS	Decal, Circular	Valtra
11133933	4	2 PCS	Valtra 75	

© 2025 Jost