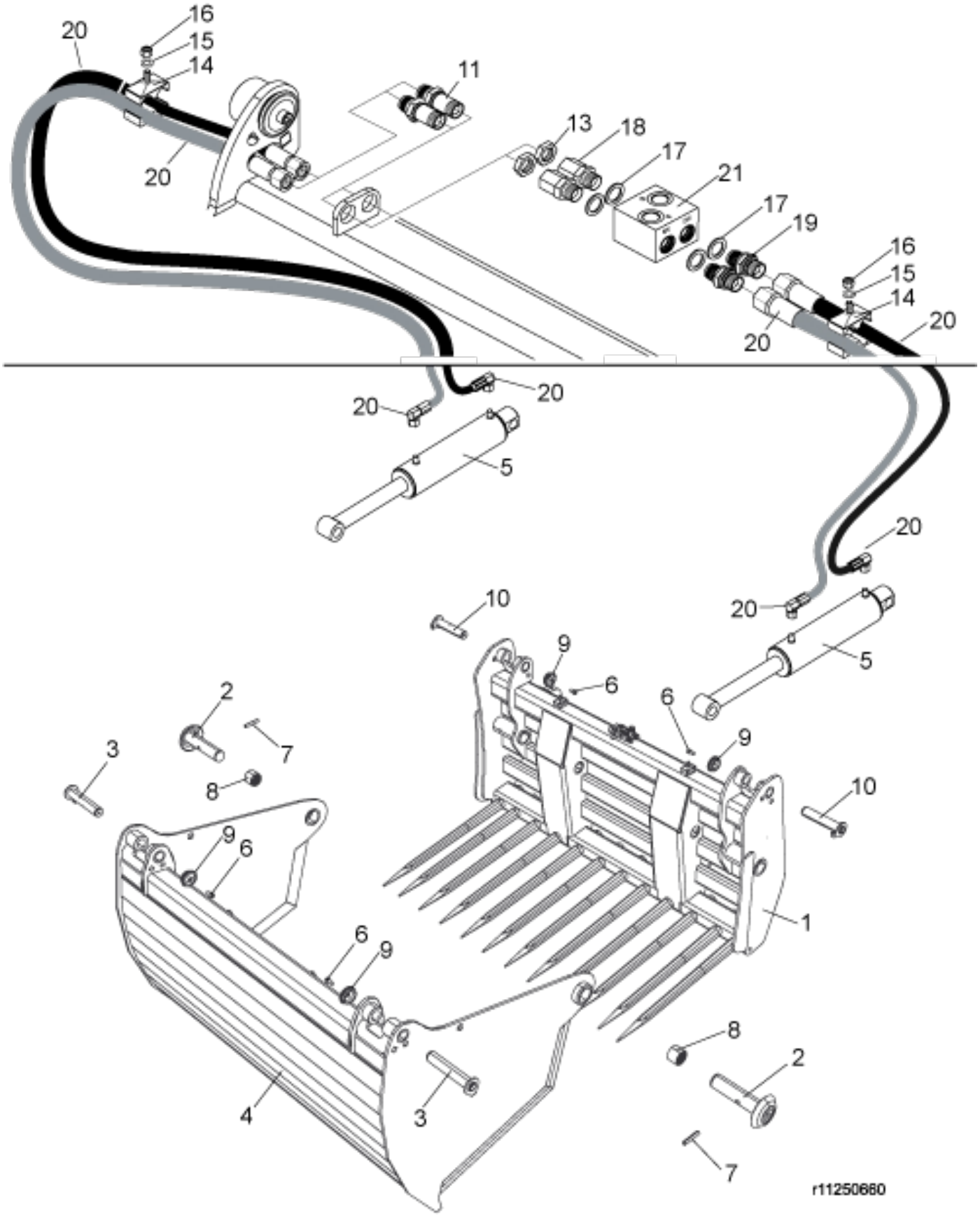

© 2025 Jost

Part assemblies	Silocut 150 SE
Specification	Year From: 2/1/2007 12:00:00 AM
	Year To: 6/30/2014 12:00:00 AM

PartNo	Pos	Qty	Name	Specifications
4500332-17	1	1 PCS	Frame, without tines	
11261273	2	2 PCS	Pin	
9020093	3	2 PCS	Pin cpl.	
11261353-17	4	1 PCS	Jaw	
60119719-1	5	2	Cylinder	1/2/2026 12:00:00 AM
5004917	6	4	Screw	
5016963	7	2 PCS	Spring pin	
5018909	8	2	Bushing	
5215131	9	4	Locking cover	
9020063	10	2 PCS	Pin	D=35, L=179
1120159	11	2	Adaptor	
5011757	13	2	Nut	
5016968	14	2	Hose clamp	
5013101	15	2	Washer	BRB 8,4 x 16
5011553	16	2	Nut	M6M M8 Loc-king
5013853	17	4	Dowty washer	Tredo 1/2", Part is included in kit 60007907 Hose cpl., 9032177 Hose cpl.
5027439	18	2 PCS	Adaptor	G1/2" - G1/2"
1120012	19	2	Adaptor	G 1/2"
10377263	20	1	Hose kit	
5033843	21	1 PCS	Restrictor block	200 bar
11136501	22	1 PCS	Decal, Brand	Silocut
11136516	23	1	Warning decal	
11136517	24	1	Warning decal	"Tightening of tine"

© 2025 Jost