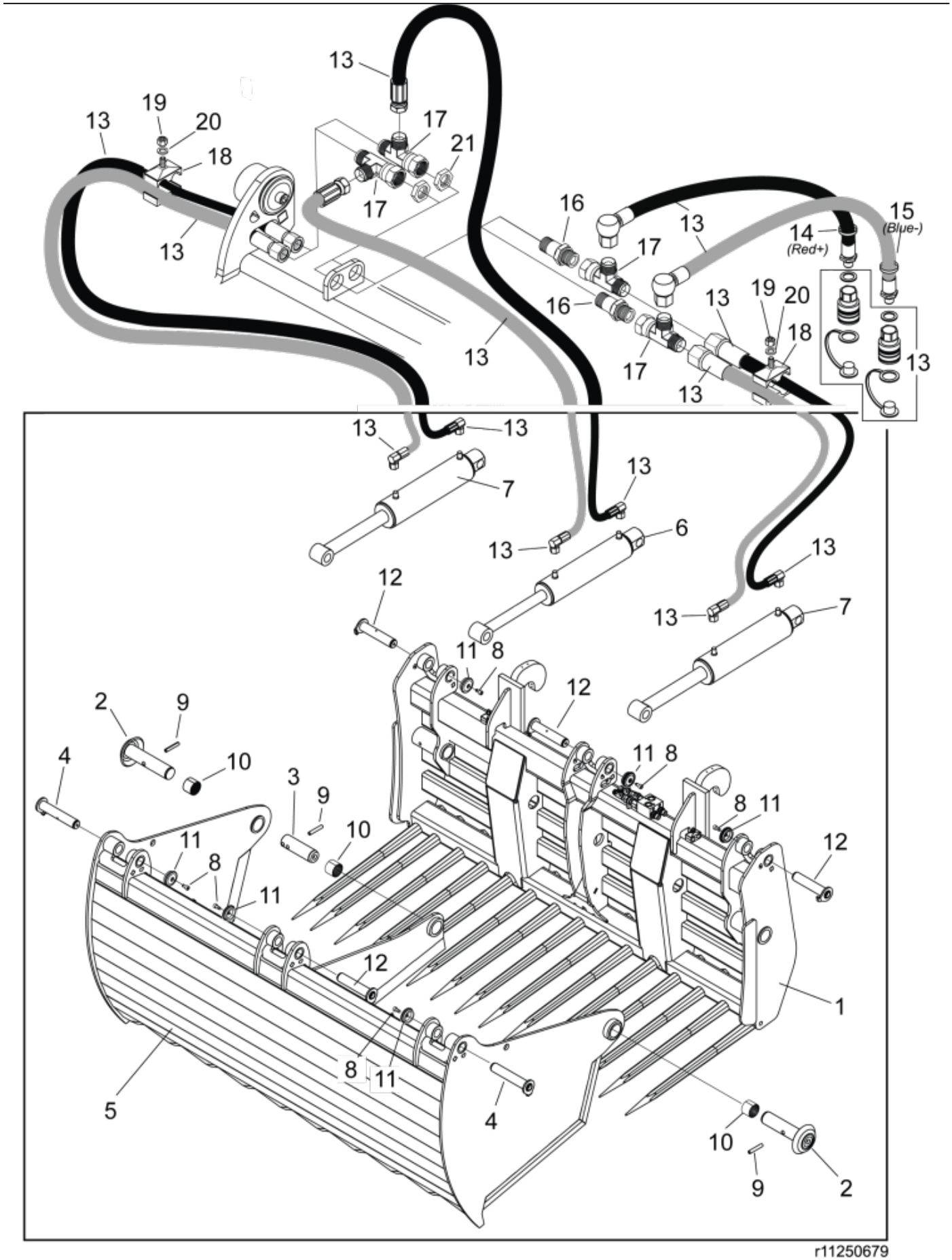

© 2025 Jost

Part assemblies	Silocut 190 SE
Specification	Year From: 2/1/2007 12:00:00 AM
	Year To: 6/30/2014 12:00:00 AM

PartNo	Pos	Qty	Name	Specifications
4500338-17	1	1 PCS	Frame, without tines	
11261273	2	2 PCS	Pin	
11261276	3	1 PCS	Pin	
9020093	4	2 PCS	Pin cpl.	
11261345-17	5	1 PCS	Jaw	
60119718-1	6	1	Cylinder	1/26/2026 12:00:00 AM
60119719-1	7	2	Cylinder	1/2/2026 12:00:00 AM
5004917	8	6	Screw	
5016963	9	3 PCS	Spring pin	
5018909	10	3	Bushing	
5215131	11	6	Locking cover	
9020063	12	4 PCS	Pin	D=35, L=179
10377247	13	1	Hose kit	
5022177	14	1	Cable tie	Red
5022179	15	1	Cable tie	Blue
1120159	16	2	Adaptor	
5027419	17	4	T-Adapter	G1/2"
5016968	18	2	Hose clamp	
5011553	19	2	Nut	M6M M8 Loc-king
5013101	20	2	Washer	BRB 8,4 x 16
5011757	21	2	Nut	
11136501	22	1 PCS	Decal, Brand	Silocut
11136516	23	1	Warning decal	
11136517	24	1	Warning decal	"Tightening of tine"

© 2025 Jost