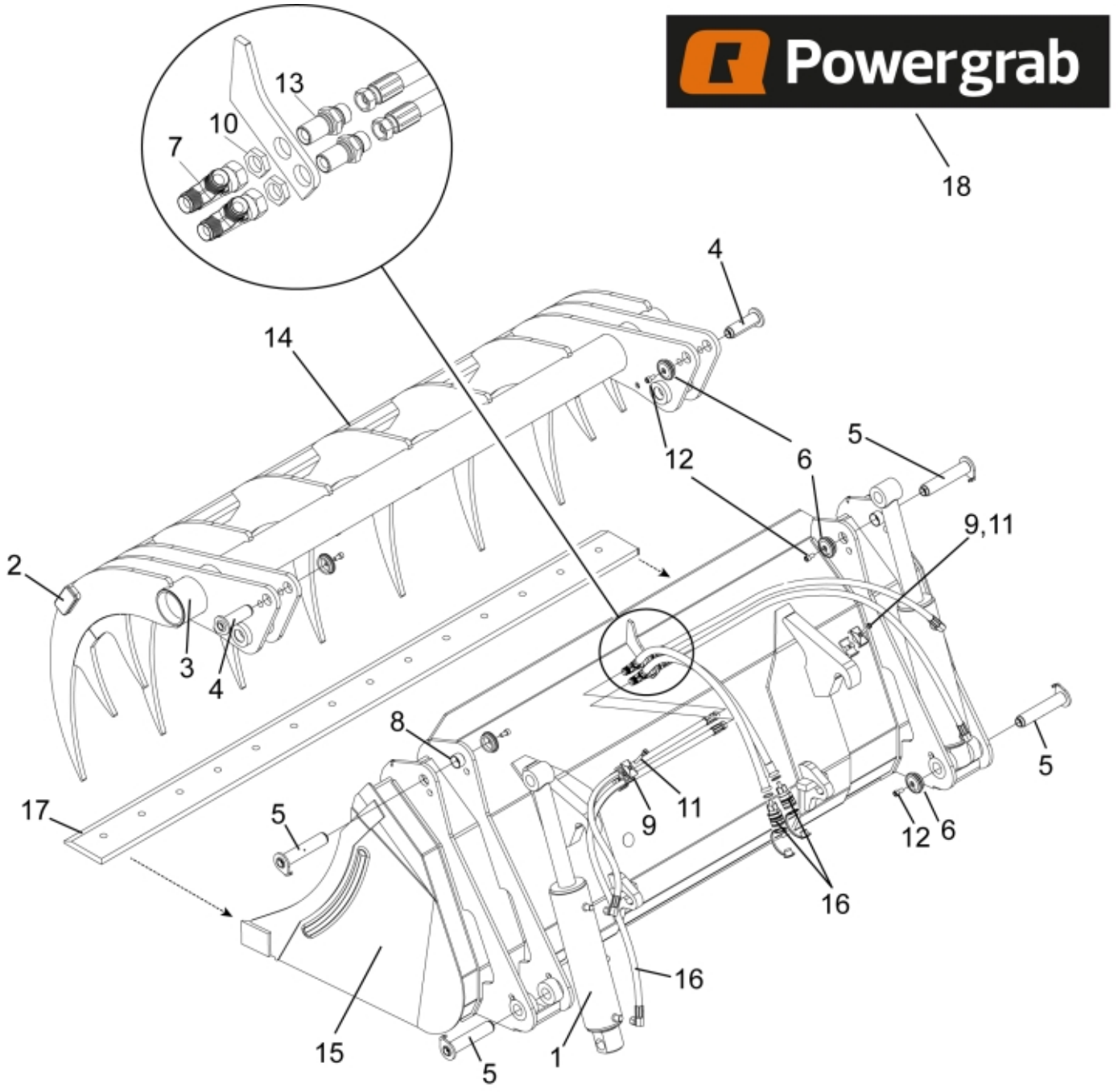

r11250738

© 2025 Jost

Part assemblies	Powergrab 210 Euro
Specification	Year From: 7/1/2008 12:00:00 AM

PartNo	Pos	Qty	Name	Specifications
60119719-1	1	2	Cylinder	1/2/2026 12:00:00 AM
11261472	2	2 PCS	Plastic cover tube	
11261471	3	2	Plastic cover	
9020107	4	2 PCS	Pin	D=35, L=116
9020063	5	4 PCS	Pin	D=35, L=179
5215131	6	6	Locking cover	
5027419	7	2	T-Adapter	G1/2"
5018514	8	4	Bushing	D35 L=20
5016968	9	2	Hose clamp	
5011757	10	2	Nut	
5011553	11	2	Nut	M6M M8 Loc-king
5004917	12	6	Screw	
1120159	13	2	Adaptor	
11262095	14	1 PCS	Grab head	
11261432	15	1 PCS	Bucket	
5022119		2	• Plug	
9031432	16	1 PCS	Hose kit	
60044777	17	1 PCS	Cutting edge	2150mm
11137143	18	1 PCS	Decal	Powergrab
1123673		1	Warning decal	
1123674		1	Warning decal	"Read manual"

© 2025 Jost