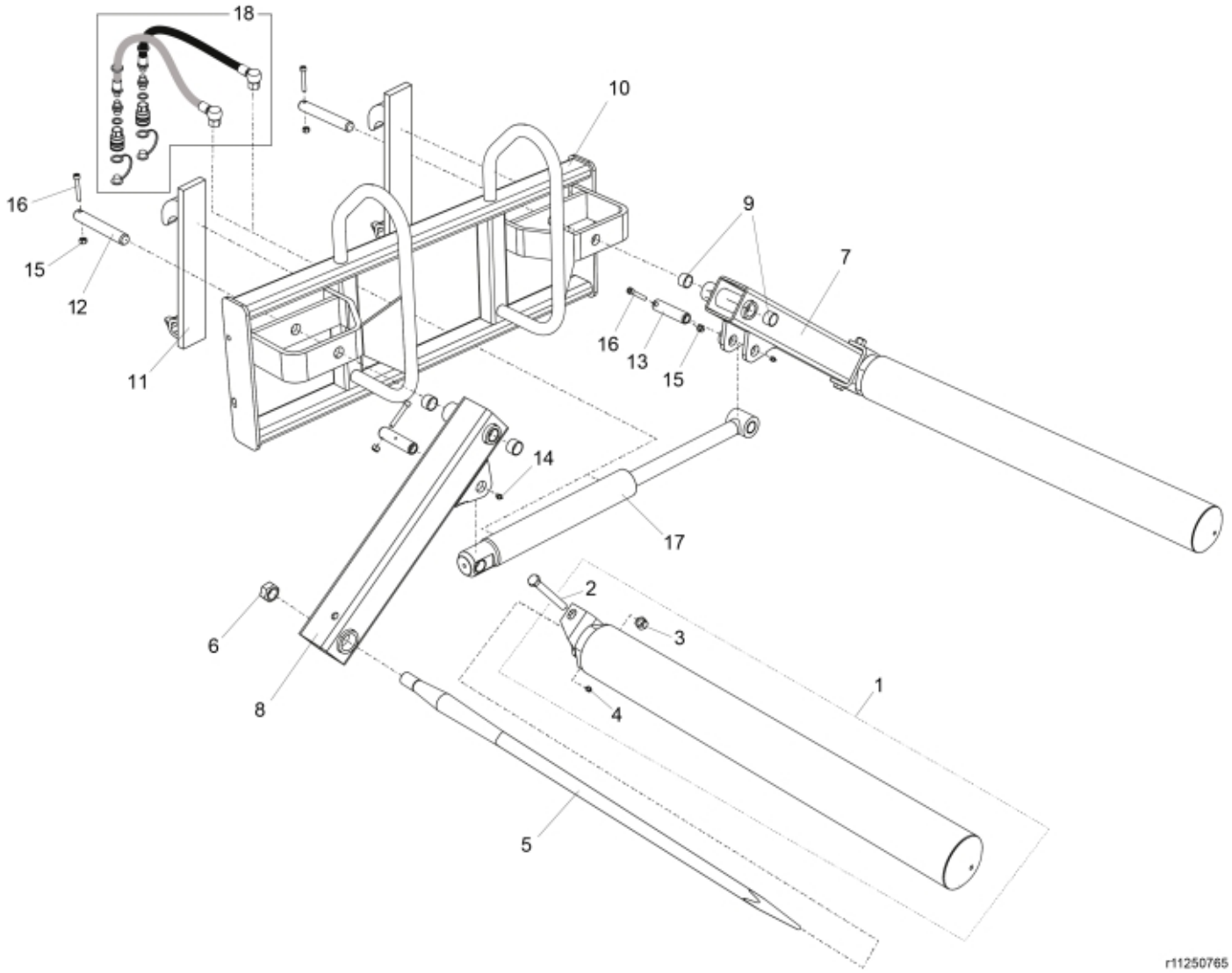

© 2025 Jost

Description	127mm
Part assemblies	Flexibal SMS
Specification	Year From: 4/1/2009 12:00:00 AM

PartNo	Pos	Qty	Name	Specifications
1209076-22	1	2 PCS	Roller	127mm, Quicke Orange
5002163	2	1	• Screw	M6S 16x140
5011557	3	1	• Nut	Loc-King M16
5023005	4	1	• Greaser	M 10 x 1
5068120-17	5	2	Tine with nut	L=1240mm (5068004)
60011231-17	5*	2 PCS	Tine with nut	
5068116	6	2	• Nut	Conus 2
1209638	7	1	Beam	LH
1209639	8	1	Beam	RH
5018515	9	4	Bushing	D30 L=20
60013693	10	1 PCS	Frame SMS	
830437	11	2 PCS	• Implement hook	SMS
60044912	12	2 PCS	Pin	
1116307	12*	2 PCS	Pin	*fits implements manufactured before July 2019
1116435	13	2 PCS	Pin	
5023005	14	2	Greaser	M 10 x 1
5011554	15	4	Nut	Loc-King M10
5004082	16	4 PCS	Screw	MC6S 10x65
60110586-1	17	1	Cylinder	Glossy Black, 3/28/2026 12:00:00 AM
10377308	18	1	Hose kit	
11136503	19	1 PCS	Decal, Brand	Flexibal
1123674	20	1	Warning decal	"Read manual"

© 2025 Jost